ARCHGARD
FIREPLACE PRODUCTS

OPTIMA PS1
Pellet Stove

Users' Installation Operation and Maintenance Manual

NATIONAL FIREPLACE INSTITUTE NFI CERTIFIED
www.nficertified.org

We recommend that our pellet hearth products be installed and serviced by professionals who are certified in the United States by NFI (National Fireplace Institute®) or in Canada by WETT (Wood Energy Technical Training).

PRIOR TO FIRST FIRE: Remove all labels from glass. Clean fingerprints from plated surfaces with a non-abrasive liquid glass cleanser and soft cloth to prevent permanent staining. (See Page 28)

CHILDREN AND ADULTS SHOULD BE ALERTED TO THE HAZARDS OF HIGH SURFACE TEMPERATURES, ESPECIALLY THE STOVE GLASS, AND SHOULD STAY AWAY TO AVOID BURNS OR CLOTHING IGNITION.

c LC us

Installer: Please complete the details on the back cover and leave this manual with the homeowner.
Homeowner: Please keep these instructions for future reference.

ARCHGARD
LIFETIME LIMITED WARRANTY

7116 Beatty Dr
Mission, BC V2V 6B4
Canada

200-0242

Dec 2016

Congratulations on choosing a state-of-the-art Archgard Hearth Product!

The hand crafted Optima PS1 has been designed to provide you with comfort, security and economy for many years of trouble-free enjoyment.

It has been our experience that the overall enjoyment of your new appliance will be greatly enhanced by becoming familiar with its installation, operation and maintenance. Prior to installation, we ask that you take a few moments to read this manual.

We wish you and your family many years of enjoyment in the warmth and comfort of this hearth appliance.

Archgard fireplace products are designed with reliability and simplicity in mind. In addition, our internal Quality Assurance Team carefully inspects each unit thoroughly before it leaves our door. Archgard is pleased to extend this Limited Lifetime Warranty to the original purchaser of an Archgard Product.
See pages 43-44 for details.

We recommend you record the following information:

Fireplace Model Number: OPTIMA PS1 Serial Number: _____

Date of Installation: _____

Dealer's Name & Address: _____

_____

Dealer's Phone Number: _____

TABLE OF CONTENTS

Important Safety Notes	4
Rating Plate Label	6
Specifications	7
Dimensions	8
INSTALLATION METHODS	
Important Installation Notes	9
Residential & Mobile Home Installation	10
Exhaust and Combustion Air Supply	11
Venting	12-16
OPERATING INSTRUCTIONS	
Operating Safety Precautions	18
Start-Up Check List	19
Filling the Hopper	20
Control Functions	21-23
Start-Up and Shut-Down Instructions	24
Fine Tuning Stove	25-26
Thermostat	26
MAINTENANCE	
Cleaning Door Glass	27
Ash Disposal	27-28
Cleaning your Pellet Stove	29-35
Miscellaneous Maintenance	36
Electrical Circuit Diagram	37
Component Locations	38
Troubleshooting	39-41
ACCESSORY / PARTS REPLACEMENT	
Accessory & Replacement Parts List	42
Archgard Warranty	43-44
Warranty Registration Card	45

IMPORTANT SAFETY NOTES

- **When installing your stove, particular attention should be paid to fire protection. If this room heater is not properly installed, a house fire may result. To reduce the risk of fire, follow the installation instructions. Contact local building, fire officials or authority having jurisdiction about restrictions, installation inspection and permit requirements in your area.**
- **CAUTION: Never use gasoline, gasoline-type lantern fuel, kerosene, charcoal lighter fluid, or similar liquids to start or "freshen up" a fire in this heater. Keep all such liquids well away from the heater while it is in use.**
- **DO NOT BURN GARBAGE OR FLAMMABLE FLUIDS SUCH AS GASOLINE, NAPHTHA OR ENGINE OIL.**
- **Do not store any fuel closer than 2 feet from your unit. Do not place wood, paper, furniture, drapes or other combustibles near the appliance.**
- **RISK OF FIRE! Do not operate with stove door open.**
- **WARNING! Never draw outside combustion air from a wall, floor or ceiling cavity or from any enclosed space such as an attic or garage, carport or under a mobile home.**
- **Check your chimney system thoroughly when installing into an existing metal or masonry chimney. Seek professional advice if in doubt about its condition.**
- **Comply with all minimum clearances to combustibles as shown in this manual for this appliance.**
- **HOT WHILE IN OPERATION! Keep children, pets, clothing and furniture away. Contact can cause skin burns.**
- **All fuel burning appliances consume oxygen during operation. It is important that you supply a source of fresh air to your unit while burning. A slightly opened window is sufficient for this purpose. If you also have a fireplace in your home, a downdraft may be created causing a draft down your chimney. Provide adequate ventilation. This does not apply if the stove is installed with outside combustion air connection.**
- **The controls of your unit or the air supply passages should not be altered to increase firing for any reason.**
- **Do not permit soot or ash build-up in the venting system. Check and clean venting system at regular intervals.**
- **Cool ashes should be disposed of carefully, using a metal container.**
- **Do not connect to any air distribution duct or system.**
- **Do not connect this unit to a chimney flue already serving another appliance.**
- **This appliance must be connected to a vent and terminate to the outside of the building envelope. Never vent to another room or inside a building.**
- **Do not operate if the gasket on the door is missing or damaged.**
- **Do not operate with broken glass.**
- **For further information refer to NFPA 211 (USA) or CAN/CSA-B365 (Canada).**

YOUNG CHILDREN SHOULD BE CAREFULLY SUPERVISED WHEN THEY ARE IN THE SAME ROOM AS THE STOVE.

SAFETY NOTE: If this stove is not properly installed, a house fire may result. For your safety, follow the installation instructions, vent manufacturer's instructions, contact local building, fire officials, or authority having jurisdiction about restrictions and installation inspection requirements in your area.
The authority having jurisdiction should be consulted before installation to determine the need to obtain a permit.

WHEN LOCATING YOUR STOVE: Consider safety, convenience, traffic flow, and the fact that the stove will need a chimney and chimney connector. It is a good idea to plan your installation on paper, using exact measurements for clearances and floor protection, before actually beginning the installation.

These installation instructions describe the installation and operation of the OPTIMA PS1 pellet stove. This stove meets the U.S. Environmental Protection Agency's emission standards. The Optima PS1 is listed by Labtest Certification, Inc. to ASTM E1509-04. The Optima PS1 is approved for mobile home installation (in the US and Canada) when not installed in a sleeping room and when an outside combustion air inlet is provided. The structural integrity of the mobile home floor, ceiling, and walls must be maintained. The stove must be properly grounded to the frame of the mobile home. See instructions for connecting the stove to get outside combustion air.

SAFETY LABEL
A copy of the label that accompanies each Archgard Optima PS1 pellet stove is printed on the next page for your convenience.

NOTE: Archgard units are constantly being improved. If there is a conflict between the label on the unit and the one printed here, the label on the unit is the correct one. The safety label is located on the underside of the hopper lid.

LISTED ROOM HEATER, PELLET FUEL-BURNING TYPE.
ALSO SUITABLE FOR MOBILE HOME INSTALLATION.

MODEL: OPTIMA PS1 FREE STANDING STOVE
TESTED TO: ASTM E1509-04

DO NOT REMOVE THIS LABEL

SERIAL NUMBER / NUMÉRO DE SÉRIE:

MAXIMUM INPUT RATING: 42,000BTU/HR (APPROXIMATELY 5LB/HR OF WOOD PELLETS OR 6LB/HR OF SHELLED CORN)
ELECTICAL RATING: 120VAC, 60HZ, LESS THAN 5A.
THIS APPLIANCE IS SUITABLE FOR MOBILE HOME INSTALLATION IN US & CANADA. SEE MANUAL FOR INSTALLATION INSTRUCTIONS.

PREVENT HOUSE FIRES:
INSTALL ONLY IN ACCORDANCE WITH THE MANUFACTURER'S INSTALLATION AND OPERATING INSTRUCTIONS. CONTACT LOCAL BUILDING OR FIRE OFFICIALS ABOUT RESTRICTIONS AND INSTALLATION INSPECTION IN YOUR AREA. USE ONLY LISTED TYPE L, TYPE PL VENT OR OTHER LISTED VENT SYSTEMS SUITABLE FOR PELLET FUEL BURNING STOVE. STRICTLY FOLLOW VENT MANUFACTURER'S CLEARENCES AND INSTALLATION INSTRUCTIONS. DO NOT CONNECT THIS UNIT TO A CHIMNEY SERVING ANOTHER APPLIANCE. DO NOT INSTALL A FLUE DAMPER IN THE EXHAUST VENTING SYSTEM OF THIS UNIT. DO NOT CONNECT THIS UNIT TO A CHIMNEY FLUE SERVING ANOTHER APPLIANCE.

MINIMUM CLEARANCES TO COMBUSTIBLE MATERIALS

RESIDENTIAL & MOBILE HOME INSTALLATION		ALCOVE INSTALLATION	
SIDEWALL	A - 229 mm / 9"	SIDEWALL	D - 229 mm / 9"
BACKWALL	B - 76 mm / 3"	BACKWALL	E - 76 mm / 3"
CORNER	C - 26 mm / 1"	MINIMUM ALCOVE CEILING HEIGHT : 1220 mm / 48"	
		MAXIMUM ALCOVE DEPTH : 915 mm / 36" , Minimum 381 mm / 15" clearance from stove top to ceiling.	

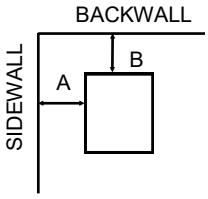

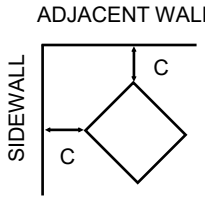

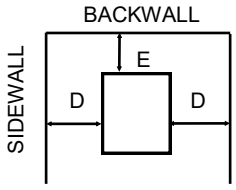

FLOOR PROTECTION

Any combustible flooring or floor covering beneath the appliance and / or within the area extending 153mm / 6" horizontally beyond the appliance on any side equipped with a door, and beyond the appliance on the other sides, shall be protected by a continuous, durable, non-combustible pad that will provide ember protection. Refer to Canadian CSA B365 and USA NFPA 211 Installation Codes for details. It is recommended that floor protection extends beneath the vent pipe.

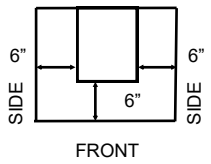

FOR USE WITH SUITABLE PELLETIZED FUEL ONLY. See instruction manual on the specifications of fuels. **USE OF OTHER FUELS MAY DAMAGE THE HEATER AND CREATE A HAZARDOUS CONDITION. DO NOT OBSTRUCT THE COMBUSTION AIR OPENING. RISK OF SMOKE AND FLAME SPILLAGE, OPERATE ONLY WITH ASH CLEAN-OUT SLIDER AND ASH DRAW IN PLACE; AND THE DOOR FULLY CLOSED. KEEP FURNISHINGS AND OTHER COMBUSTIBLE MATERIALS AWAY FROM STOVE. DANGER, RISK OF ELECTRICAL SHOCK, DISCONNECT POWER BEFORE SERVICING STOVE. MOBILE HOME INSTALLATION REQUIRE OUTSIDE COMBUSTION AIR, PROPER ELECTICAL GROUNDING AND PROPER FASTENING OF STOVE TO THE FLOOR. DO NOT INSTALL IN SLEEPING ROOM. THE STRUCTUAL INTEGRITY OF THE MANUFACTURED HOME FLOOR, WALLS AND CEILING/ROOF MUST BE MAINTAINED.** See manual for instructions. Inspect and clean stove and vent system regularly, see instruction manual for servicing instructions. Replace glass only with 5mm ceramic glass. Optional Multi-fuel burn pot kit Part # PS1-MF. See manual for other stove options.

Manufactured by: ARCHGARD INDUSTRIES LTD.
MISSION, BC ~ CANADA

Made in Canada

UNITED STATES ENVIROMENTAL PROTECTION AGENCY
CERTIFIED TO COMPLY WITH PARTICULATE EMMISION STANDARDS

ARCHGARD
FIREPLACE PRODUCTS

DATE OF MANFACTURE: 2006 2007 2008 JAN FEB MAR APR MAY JUN JUL AUG SEP OCT NOV DEC

CAUTION

- **HOT WHILE IN OPERATION.**
- **DO NOT TOUCH, KEEP CHILDREN, CLOTHING AND FURNITURE AWAY.**
- **CONTACT MAY CAUSE SKIN BURNS. READ NAMEPLATE AND INSTRUCTIONS.**

SPECIFICATIONS

MODEL	OPTIMA PS1 FREESTANDING Pellet Stove
WIDTH	23.75” (603 mm)
DEPTH	28” (711 mm)
HEIGHT	32.5” (826 mm)
E.P.A. EMISSIONS	0.9 grams / hour
INPUT RATING (APPROX)	12,000 - 42,000 Btu/hr (3.5 - 12.3 kW)
APPROXIMATE HEATING AREA	800 - 1,500 FEET^2 (74.3 - 139.4 METRE^2)
HOPPER CAPACITY	95 lb (43 kg)
DURATION ON LOW FIRE	Approximately 60 Hours with full hopper
STOVE BODY WEIGHT WITH PACKAGING	300 lb (113 kg)

PELLET FUEL SPECIFICATIONS:

Use the best quality Premium pellet fuel available. This will give the most heat output with less maintenance.
The standard for pellet fuel is set out by the Pellet Fuels Institute with the following qualities:
Density: consistent hardness and energy content (minimum 40 pounds/cubic foot)
Dimensions: length (1 ½” maximum) and diameter (1/4” to 5/16”) to assure predictable fuel amounts and to prevent jamming
Fines: limited amount of sawdust from pellet breakdown to avoid dust while loading and problems with pellet flow during operation (amount of fines passing through 1/8” screen no more than .5 percent by weight)
Chlorides: limited salt content (no more than 300 parts per million) to avoid stove and vent rusting
Ash content: important factor in maintenance frequency
The only difference that determines the Premium and Standard pellet fuel is their ash content. Standard grade fuel is usually up to 3% ash content, while premium grade is less than 1 percent. This difference is a result of the pellet contents. Standard pellets are derived from materials that produce more residual ash, such as tree bark or agricultural residues. Premium pellets are usually produced from hardwood or softwood sawdust containing no tree bark. Premium pellet fuel is the most common and makes up 95 percent of pellets sold on the market.

OPTIONAL MULTI-FUEL BURN POT KIT
This pellet stove can burn shelled corn as fuel with the installation of the optional multi-fuel burn pot kit, PART #: PS1-MF. Follow the operating instructions included with the kit.

DIMENSIONS

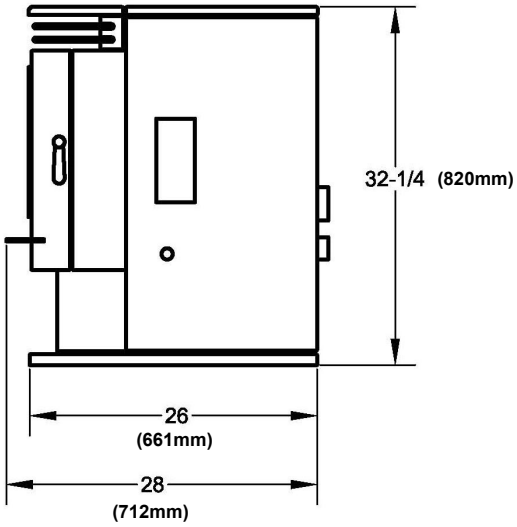

RIGHT SIDE

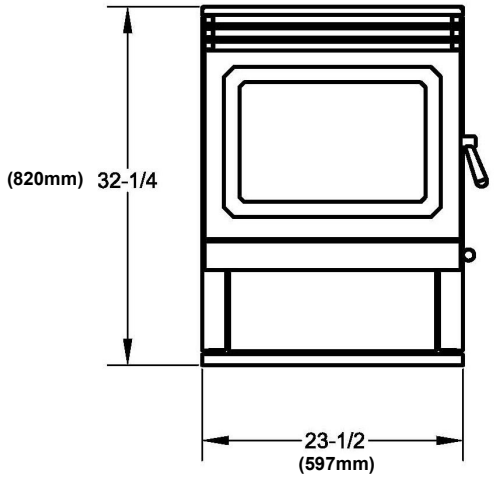

FRONT

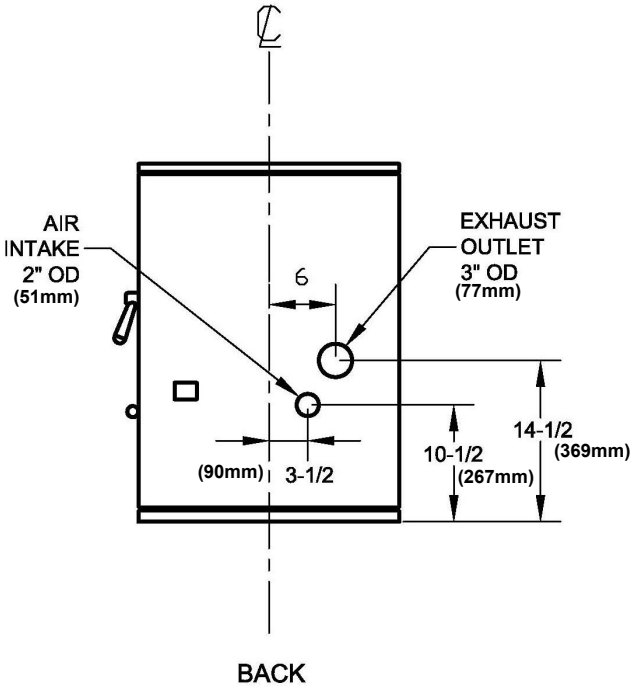

BACK

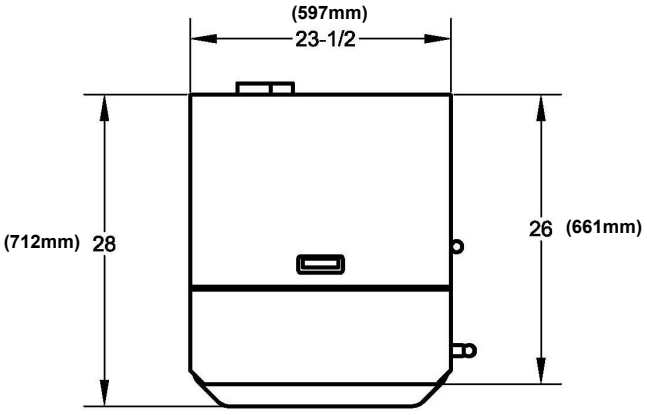

TOP

INSTALLATION INSTRUCTIONS

IMPORTANT INSTALLATION NOTES:

- **Please read this entire manual before you install and use your new Optima PS1 Pellet stove. Failure to follow instructions may result in property damage, bodily injury or even death. Be aware that local codes and regulations may override some items in this manual. Check with your local authority having jurisdiction.**
- **Select a location for your Archgard Optima PS1 pellet stove. Double check the clearances on the label and set the stove in place.**
- **Check that the intended location of the vent does not interfere with trusses, joists or rafters before proceeding further.**
- **Check that the intended location of the vent termination is located in a suitable location. See the diagram of allowable vent terminal location.**
- **Make sure there is a nearby suitable grounded receptacle to supply 120VAC, 60HZ and at least 5A of electrical power needed to operate the stove.**
- **Obtain any necessary permits for the installation of the stove.**

NATIONAL FIREPLACE INSTITUTE® NFI CERTIFIED www.nficertified.org

We recommend that our woodburning hearth products be installed and serviced by professionals who are certified in the U.S. by the National Fireplace Institute® (NFI) as NFI Woodburning Specialists or who are certified in Canada by Wood Energy Technical Training (WETT).

Wood Energy Technical Training www.wettinc.ca

RESIDENTIAL & MOBILE HOME INSTALLATION

MINMUM CLEARANCES TO COMBUSTIBLE MATERIALS

SIDEWALL A - 229 mm / 9”
BACKWALL B - 76 mm / 3”
CORNER C - 26 mm / 1”

MAXIMUM ALCOVE DEPTH: 915 mm / 36” with minimum back wall clearance or front of stove door recessed a maximum of 178mm / 7” into alcove.
MINIMUM ALCOVE CEILING HEIGHT:1220 mm / 48” OR MINIMUM 381 mm / 15” CLEARANCE FROM TOP OF STOVE TO CEILING.

CLEARANCE TO VENT PIPE MUST ALSO BE OBSERVED. PLEASE SEE VENT MANUFACTURES’ INSTRUCTIONS FOR VENT PIPE CLEANRANCE TO COMBUSTIBLES.

NOTE—Even though the pellet stove is safe to install to the minimum clearances listed above, additional clearances should be considered for the ease of fueling, operating and maintenance.

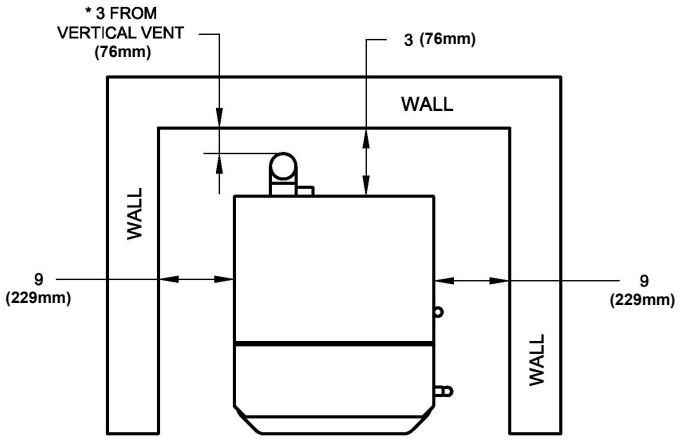

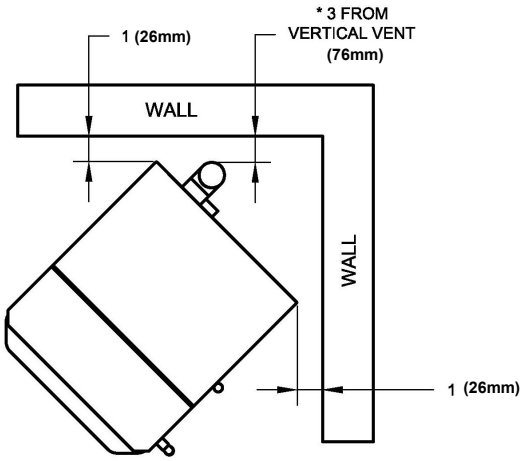

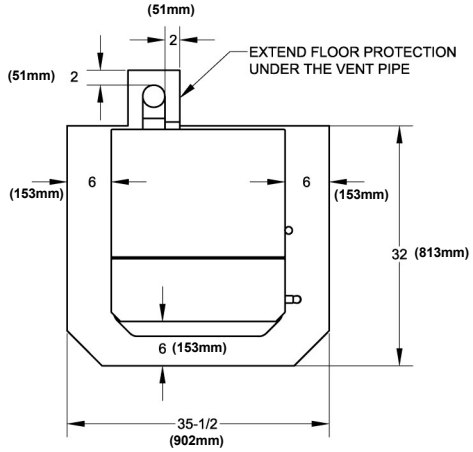

FLOOR PROTECTION

The floor pad (ember pad) must be of non-combustible material and must extend 6" (153mm) in front of the door opening and 6" (153mm) to the sides and rear of the unit.
If the listed stove clearance is less than the required floor pad, use the stove listing. Contact your local Authority Having Jurisdiction and/or the CSA B365 in Canada or NFPA 211 in USA for more details.
Hearth pad should also extend beneath the horizontal or vertical vent.

COMBUSTION AIR SUPPLY

Fresh outside air is not required for normal residential installation. The stove consumes oxygen during operation. It is important that you supply a source of fresh air to your stove while burning. A slightly opened window is sufficient for this purpose. If you also have a fireplace in your home, a downdraft may be created causing a draft down your chimney. Provide adequate ventilation in the room.

Outside combustion air is a requirement for mobile home installation. It is also highly recommended for tightly insulated homes and a good feature for normal installations.
A metallic 2” diameter rigid or flexible pipe should be securely connected to the air intake connector at the back of the stove. The fresh air may be taken from outside of the house through a hole in an adjacent wall or from the floor of houses with ventilated craw space. Be sure not to damage the structural integrity of the house The pipe and penetrations should be properly sealed and weather-proofed. The intake pipe should be properly terminated with a cap or elbow to shield the inlet from the weather. The termination openings should be protected by a rodent screen. Keep the pipe length as short as possible for optimal performance. For best performance, keep 2” diameter intake pipe length under 10 feet. If longer runs are required, use an adapter to connect to 3” diameter intake pipe.
Outside air can also be obtain by installing a listed direct-vent system for pellet stoves. Follow the vent manufacturer’s instructions.
Never draw outside combustion air from a wall, floor or ceiling cavity or from any enclosed space such as an attic, garage, carport or under a mobile home.

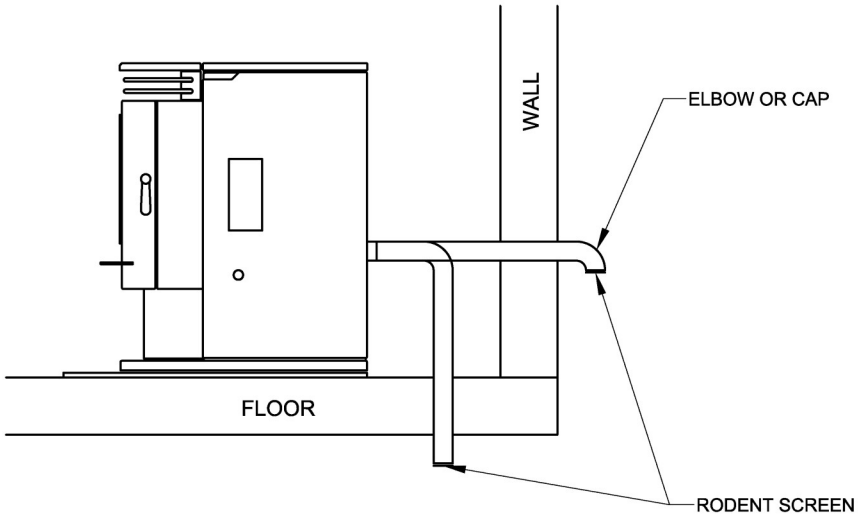

VENTING

Use only listed type L, PL or other suitable listed vents for pellet fuel burning stoves. Install venting system according to the vent manufacturer's instructions. Strictly follow the vent manufacturer's clearances and use the proper vent components when passing the vent through walls and ceilings. A suitable vent termination should also be used. The performance of your pellet stove can also be hindered by improper venting system. It is recommended that your pellet stove be installed by a professional installer who is certified to install pellet stoves. An improper installed and vented pellet stove can be a fire and health hazard.

CAUTION: At no time can unlabelled parts, or substitute parts made for another venting system be used.

Maintain the structural and vapor barrier integrity of the house when cutting holes in the walls, ceiling and roof to suit the venting system and do any necessary framing as required by the vent manufacturer.

NOTE: Interior vents shall be enclosed where they extend through closets, storage areas, occupied spaces, or anyplace where the surface of the vent could be contacted by persons or combustible materials.

The stove has a 3" diameter flue connector. Vent systems with pipes either 3" diameter or 4" diameter (with a step up adapter) may be used. Use 4" vent pipe for horizontal runs over 3' and runs with elbows.

For best performance from the pellet stove, it is recommended that the total horizontal vent runs is kept to a maximum of 10 feet. Use a maximum of two 90 elbows or equivalent and one tee. Limit total vertical vent run to a maximum of 35 feet. This pellet stove is equipped with an exhaust slider restrictor just upstream of the exhaust blower. The installer can use this to balance the flow of exhaust on high draft vent configurations. This is a one time adjustment to be done only by the installer. Loosen the 1/4" hex screw securing the slider. Push the slider in to restrict the exhaust flow. Adjust till the stove burns properly on high and tighten the screw to secure the slider.

The venting system of a pellet stove is pressurized. Make sure all pipe joints and connections are air-tight to prevent the leakage of flue gas and ash. Follow the vent manufacturer's instructions to seal the vent system. Otherwise, apply a continuous bead of 500F (260C) high temperature silicone sealant at the joints and securely fasten with no less than 3 sheetmetal screws per joint or connection.

In seismically active areas, Archgard recommends that your stove be secured to the floor by using 3" long, ¼" lag bolts in the bolt down holes on the pedestal. This is mandatory with mobile home installations.

Do not connect this stove to a chimney serving another appliance.

Do not connect your stove to an air distribution duct.

TYPICAL EXHAUST TERMINATION LOCATIONS

(CHECK FOR ACCORDANCE WITH LOCAL INSTALLATION CODES)

A= Clearance above grade, veranda, porch, deck, or balcony	12 inches (30 cm)	J= Clearance to non-mechanical air supply inlet to building or the combustion air inlet of any other appliance	9 inches (23 cm)
B= Clearance to window or door that may be opened	12 inches (30 cm)	K= Clearance to a mechanical air supply inlet	3 feet (91 cm) above if within 10 feet (3 m) horizontally
C= Clearance to permanently closed window	*	L= Clearance above paved sidewalk or paved driveway located on public property	7 feet (2.13 m) +
D= Vertical clearance to ventilated soffit located above the terminal within a horizontal distance of 2 feet (61 cm) from the center line of the terminal	*	M= Clearance under veranda, porch, deck, or balcony	12 inches (30 cm) ++
E= Clearance to unventilated soffit	*		
F= Clearance to outside corner	*		
G= Clearance to inside corner	*		
H= Clearance to each side of center line extended above meter/regulator assembly	3 feet (91 cm) within a height 15 feet (4.5 m) above the meter/regulator assembly		
L= Clearance to service regulator vent outlet	3 feet (91 cm)		

(+) A vent shall not terminate directly above a side walk or paved driveway that is located between two single family dwellings and serves both dwellings

(++) Permitted only if veranda, porch, deck, or balcony is fully open on a minimum of two sides beneath the floor.

(*) Clearances shall be in accordance with local installation codes.

TYPICAL VENTING CONFIGURATIONS:

HORIZONTAL VENTING

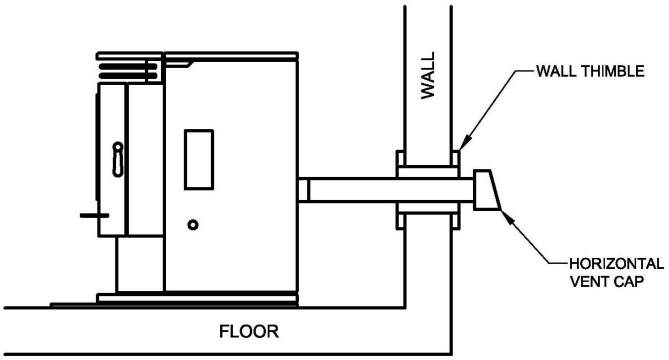

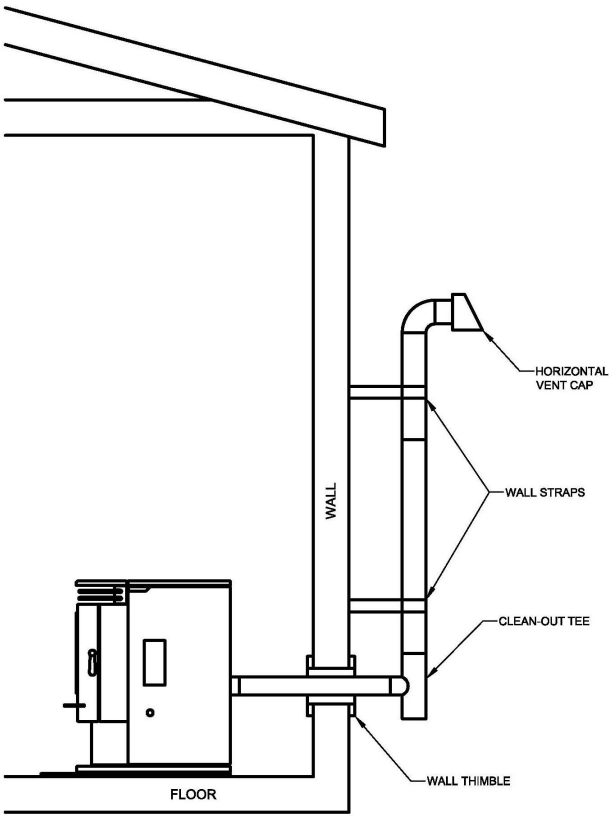

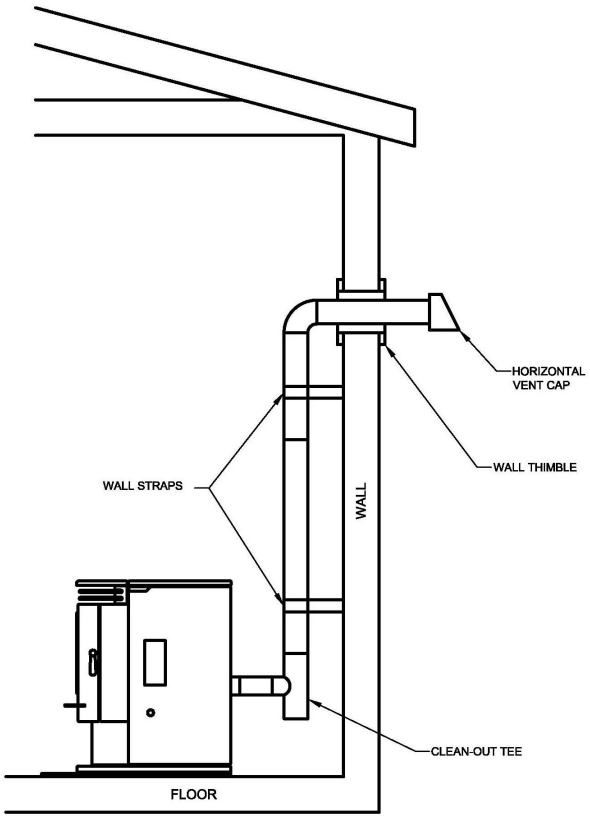

NOTE: Horizontal venting with vertical offset is preferred. The additional vertical vent rise will improve venting performance and provide natural draft to evacuate smoke from the stove in case of power failure.

VERTICAL VENTING

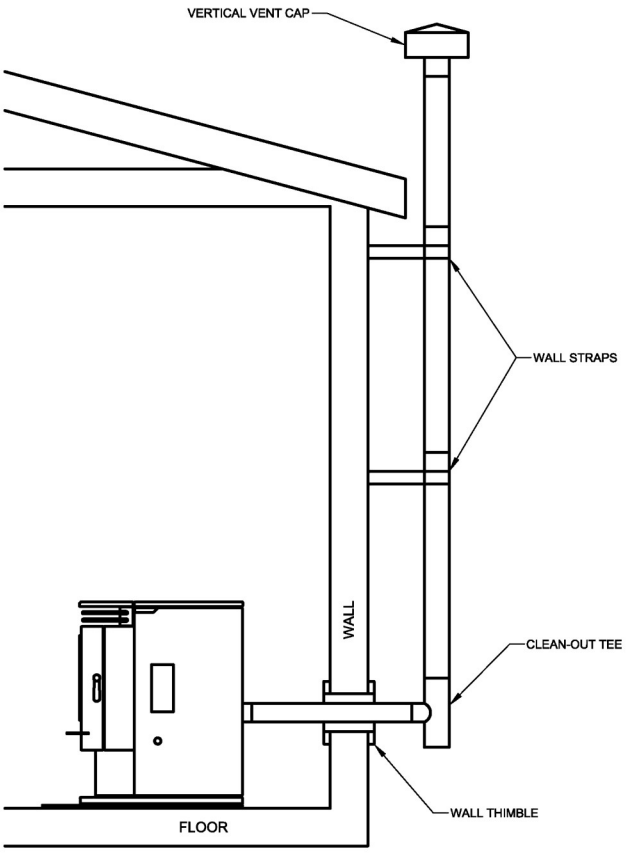

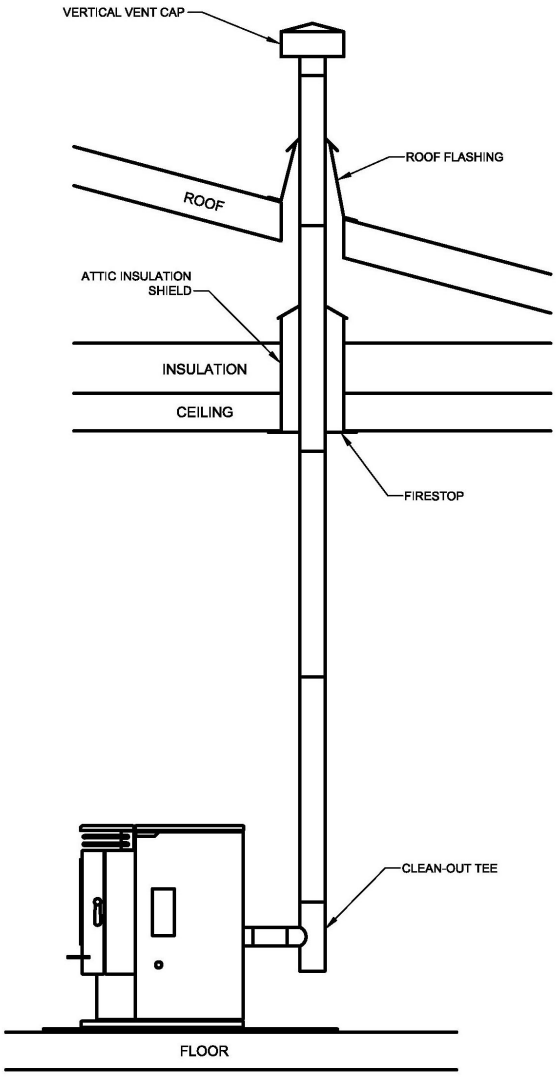

VENTING INTO FIREPLACE OR CHIMNEY

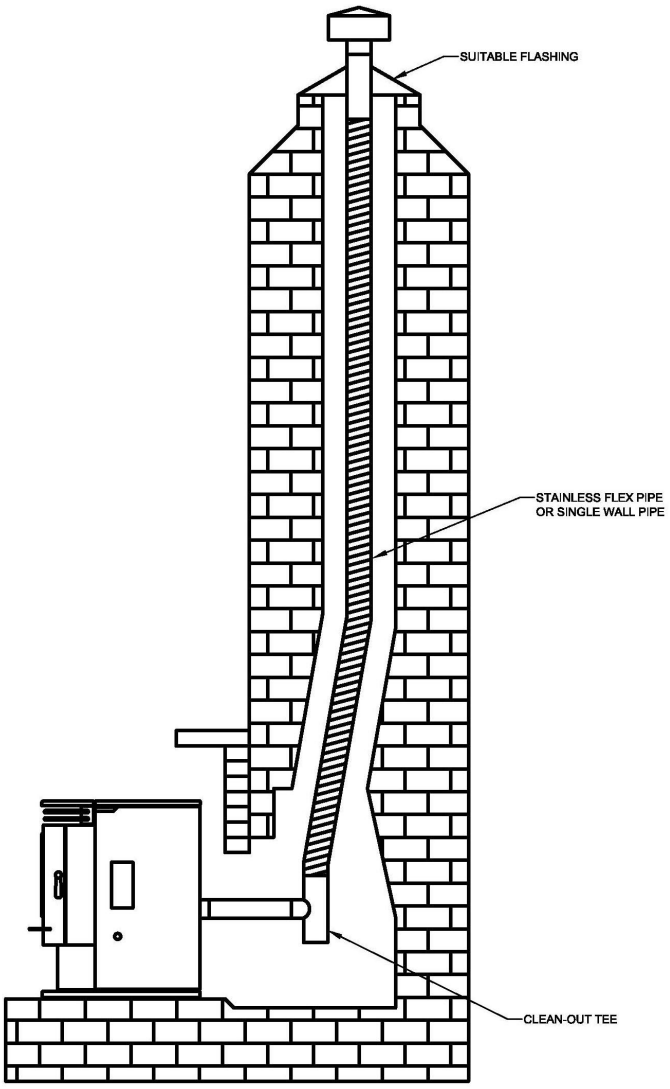

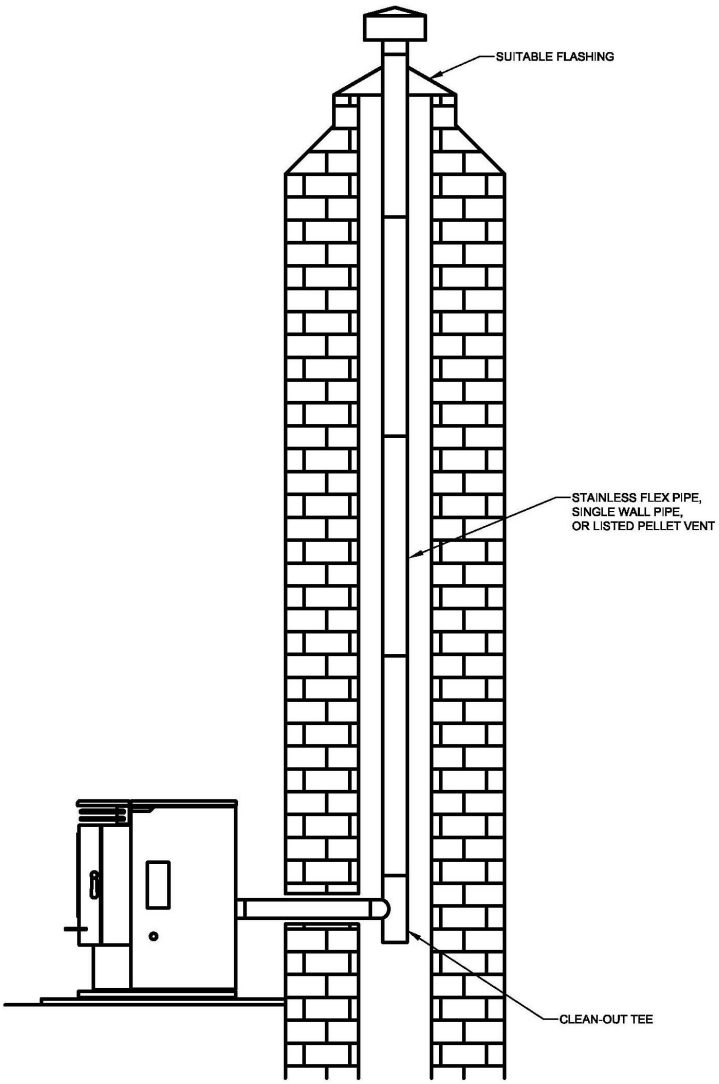

Make sure the chimney top is properly sealed to prevent the intrusion of weather with suitable flashings, collars and sealants.
Outside air maybe obtained by running an intake vent pipe up along side the exhaust and properly terminated at the top to prevent the inlet of rain or exhaust gases. Outside air may also be taken from a suitable duct passing through the ash clean-out opening.

Similar installations are applicable to factory build fireplaces and chimneys.
Check with local code for any installation restrictions.

ADDITIONAL MOBILE HOME INSTALLATION REQUIREMENTS:

In addition to standard installation instructions, the following requirements are mandatory for installation in a mobile home.

- The stove must be permanently bolted to the floor of the mobile home using screws. Once you have properly marked the position of your stove and the floor protection as outlined in the installation instructions, secure it to the floor using two lag bolts 1/4" x 3" through the two holes in the pedestal base just inside, near the front of the two side access panels.
- The stove must have a permanent outside air source for combustion as outlined in the installation instructions.
- The stove must be electrically grounded to the steel chassis of the mobile home. Use a #8 ground wire with approved termination and star washer.
- The stove must be installed with a listed pellet stove venting system, roof thimble, spark arrestor and roof flashing kit suitable for use in mobile homes.
- The vent shall extend at least 3 ft. (914mm) above the part of the roof through which it passes. The top of the vent should project at least 2ft. (610mm) above the highest elevation of any part of the mobile home within 10 ft. (3048mm) of the vent. Top sections of chimney must be removable to allow maximum clearance of 13.5 ft. (411cm) from ground level for transportation purposes.

CAUTION: THE STRUCTURAL INTEGRITY OF THE MOBILE HOME ROOF, FLOOR, WALLS AND CEILING MUST BE MAINTAINED. Also maintain the integrity of the vapor barrier at the location where the chimney or other component penetrates the exterior of the structure.

WARNING: DO NOT INSTALL THE STOVE IN A SLEEPING ROOM OF A MOBILE HOME. Never draw outside combustion air from a wall, floor or ceiling cavity or from any enclosed space such as a garage, carport or under a mobile home. Check any other local building code as other local codes may apply.

OPERATING SAFETY PRECAUTIONS

- **Hot while in operation. Contact may cause skin burns. Keep children, pets, clothing and furniture away.**
- **Use only pelletized fuel recommended by the manufacturer. See pellet fuel specifications.**
- **Only service and maintain the stove when it not operating and cool to the touch. Electrical power to the stove must be disconnected for any servicing that require the open of the side or back service panels.**
- **Do not use any flammable liquids, such as gasoline, kerosene, lighter fluid or other similar liquids to start or freshen up the fire. Keep all such liquids well away from the stove while it is in use. If manually starting the pellet stove, use only suitable solid or gel fire starter products designed specifically for starting pellet stoves.**
- **Provide adequate fresh air to room for pellet stove installed without outside combustion air.**
- **Relocate any smoke detectors that maybe false triggered by the normal operation of the stove.**
- **Keep a suitable fire extinguisher within easy reach. As with any fuel burning appliance, there is always a potential fire hazard.**
- **Keep stove door tightly close during operation.**
- **Keep area around stove free of debris, lint and any objects that might be a potential fire hazards. Do not store pellet fuel next to the stove. Keep it at least 3 feet away.**
- **Keep stove grill and air openings free of lint and any obstructions to maintain optimal efficiency.**
- **Unplug the stove when it is not going to be used for an extended period of time.**

OPERATING INSTRUCTIONS

Check List Before Starting Your Pellet Stove:

- **Check that the pellet stove is properly plugged into a 3-prong grounded 115VAC electrical receptacle. Make sure there is electrical power to the stove.**
- **Check around the pellet stove for any potential safety hazards.**
- **Check that the pellet stove is connected to a proper venting system to exhaust the stove's combustion gases outdoors. Check that the vent cap is not damaged or obstructed. Also check for any potential fire hazards around the vent cap.**
- **Make sure there is adequate supply of pellet fuel in the hopper and that the pellet fuel is in good condition and suitable for burning in this pellet stove.**
- **Make sure the burn pot is seated properly and empty of ash or clinkers. Check to make sure all the air holes of the burn pot are unobstructed and clear out any obstructions.**
- **Close and latch the door securely. The stove will not operate with the door open.**
- **Close the hopper lid. The fuel feed auger will stop if the hopper lid is opened.**

NOTE: It is normal for the stove to emit some odor and smoke with the first few initial operations. This is due the curing of the paint and 'burning-off' of manufacturing oils. For the first few operations, keep the heat setting low to medium to reduce emissions and keep the room well ventilated by open windows.

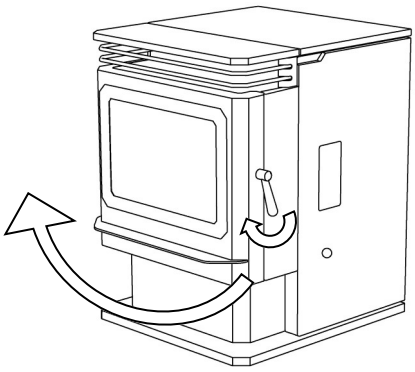

Opening the stove door:
Rotate the handle clockwise towards the front of the door until the handle is about the 9 O'clock position and swing the door to the left.

Closing the stove door:
Keep the handle horizontal about the 9 O'clock position. Swing the door to the right and push the door firmly against the stove. Rotate the handle to the 6 O'clock position to lock.

Install the burn pot by tucking the top of the burn port under the pellet drop chute. Line up the burn pot with the holder and drop the burn pot in. Make sure the burn pot is squarely seated in its holder.

SIDE VIEW OF BURN POT

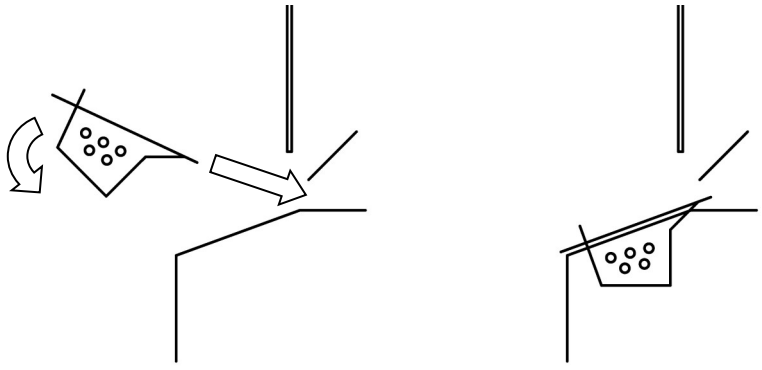

FILLING THE HOPPER WITH PELLET FUEL:

Open the hopper lid by placing your fingers in the recessed handle on the hopper lid and lifting up. Lift the lid until the prop rod catches and keeps the lid up.
Fill the hopper only with dry quality pellet fuel as noted in the fuel specification at the front of the manual.
Check and remove any foreign objects or debris mixed in with the pellet fuel that could jam up the fuel feed auger.
Be careful not to spill any fuel on the stove top and adjoining gaps. Spilling pellet fuel on the floor can also pose a slipping hazard.
To close the hopper lid, support the hopper lid with the left hand while using the right hand to pull the prop rod forward to release it from the catch. **CAUTION: Be sure to support the hopper lid to prevent possible pinching of the fingers while releasing the lid prop rod.**

WARNING: This stove is equipped with a fuel feel auger interlock switch, which will stop the fuel feed to the stove with the hopper lid opened. Re-fuel as quickly as possible. The stove will not operate with the hopper lid

Do not overfill the hopper so that the hopper lid will not close flush. When refilling the hopper while the stove is operating, please do so as quickly as possible to minimize the interruption of the fuel feed. The stove will shut down if the hopper lid remains open for more than 5 minute. It is also likely that the flames in the burn pot will go out before the time limit, especially on lower heat settings.

Do not allow the hopper run completely empty if possible. Once emptied, the auger feed system will takes a long time to reload with pellets before starting to drop pellets into the burn pot. If this happen, use the FUEL FEED button on the control panel to speed up the process. Two or three restart cycle of the stove will be required before fuel will start dropping into the burn pot.

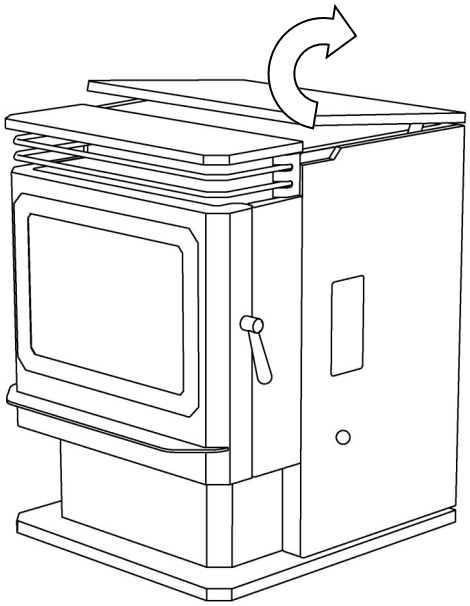

CONTROLS FUNCTIONS:

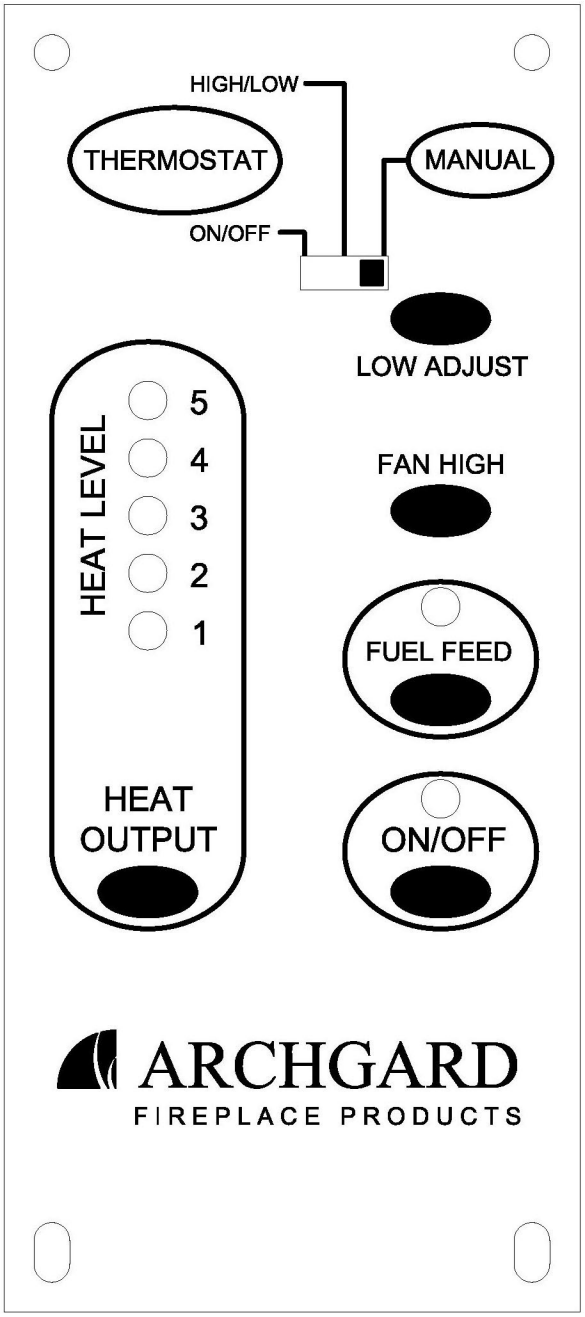

THERMOSTAT / MANUAL Switch:
Selects the pellet stove operating mode. Slide the switch to MANUAL (the far right position) to operate in user manually selectable heat level and controls. If you have a thermostat attached and wish to have the pellet stove controlled by the device, slide the switch to HIGH/LOW (the middle position) to operate the pellet stove in a modulating heat mode, where the thermostat will control the heat output of the pellet stove, alternate between the lowest heat level and the higher heat level pre-selected by the user. The ON/OFF setting (the far left position) is similar to the previous mode, except that the stove will alternate between shutdown (stove turn completely off) and restart to user selected heat level setting when commanded by the thermostat. When using the thermostat, the HIGH/LOW mode is recommended. This setting provides a more even heat output for better comfort and will extend the life of the ignition system components. In addition, the constant visual of the flames in the stove will serve as warning for people and pets to keep away from the stove during operations, rather then being startled by spontaneous start-up of the stove. After switching modes, the stove should be turned OFF and ON to reset the controls to operate in the new mode setting.
A SPST wall switch or remote control with passive on and off contact may also be used in place of the thermostat for remote operation of the pellet stove.

ON/OFF Button:
Used to turn the stove ON and OFF.
If the stove is cold during start-up, to turn the pellet stove on, press and release the ON/OFF button. The green light above the ON/OFF button will flash to indicate start-up cycle has started. Fuel pellets will start to feed into the burn pot. The electric ignition system will be automatically activated. Flames in the burn pot will appear in 3 to 7 minutes. Once the flame is well established, the start-up cycle will end. This takes about 10 minutes. At this point, the user will be able to make heat level adjustments in the manual mode, or the stove will carry on being controlled by the thermostat.
If the stove is warm at restart, the ON/OFF button must be pressed down and held for two seconds or more, until the light above the ON/OFF button is lit. The start-up cycle for the pellet stove will be initiated. The pellet stove will be able to be adjusted in the Manual after 10 minutes or carry on being controlled by the thermostat. If you are starting a new stove or refilled a completely empty hopper, see FUEL FEED button function below.

HEAT OUTPUT Button:
When the button is pressed, it will increase the heat output one heat level. Keep pressing the button will cycle the heat level from 1 to 5 and back again. The convection fan speed will also change according to the heat level. When the ON/OFF light is flashing during the start-up cycle, the heat output button will cycle the heat level, but the stove will not respond to adjustments. When the ON/OFF light is solid, indicating the start-up cycle has ended (about 10 minutes), then the stove will respond, and only in manual mode. If it is a warm start-up, the ON/OFF light will not flash indicating a start-up cycle. The stove will respond to heat adjustments only after 10 minutes from start-up.

FAN HIGH Button:
Use this button to override the automatic fan speed control and turn the convection fan on high. The smart control on this pellet stove will vary the fan speed in accordance with heat level setting. It is best to let the controller adjust the speed of the fan for best efficiency and minimized fan noise.

FUEL FEED Button:
This button manually activates the fuel feed auger. Press and hold this button will turn on the auger to feed pellets into the burn pot.
When first using the pellet stove, or when you completely empty the hopper of pellets and restarting after reloading the hopper, you can load the auger faster by pressing and holding this button until you see pellets dropping into the burn pot. This button will turn off after one minute and must be released and pressed again if you want to continue to manually activate the fuel feed auger.

LOW ADJUST Button:
This button is used to change the fuel feed rates on the heat level 1 for various quality pellet fuels. This button is used to keep the flames from extinguishing on heat level 1.
Push and release the LOW ADJUST button until the heat level 1 and 4 lights appear. This will slightly increase the fuel feed rate on heat level 1. Push and release the button until the heat level 1 and 3 lights appear, this will reduce the fuel feed rate on heat level 1. Use this setting only if the operator has determined that the flames will stay on at this fuel feed rate. To return to the default setting, push and release the button until just the heat level 1 light is on, this is a general setting and will likely work with most types of fuels.

START-UP INSTRUCTIONS

When first operating the pellet stove, switch it to the MANUAL mode, so you can have full control of the pellet stove's control functions and familiarize yourself with how the pellet stove works. During initial start-up, pellet fuel needs to fill the auger feed system before starting to drop pellets into the burn pot. The FUEL FEED button on the control panel can be used to speed up this process. Multiple restarts maybe required to get the pellets dropping into the burn pot.

Start-up a cold stove:

Press and release the ON/OFF button. The green light above the ON/OFF button will flash to indicate that the start-up cycle has started. The light above the FUEL FEED button will turn on intermittently, indicating the activation of the auger, which feeds fuel pellets into the burn pot. The electric igniter is activated. The igniter will takes time to heat up before igniting the pellets in the burn pot. This can takes as little as 3 minutes or up to 7 minutes. If no flames or a good strong fire appear before 10 minutes, the stove will shut down. Press the ON/OFF button again to restart the stove..

As a safety feature, if the flames do not start up fast enough to trip the Proof of Fire switch, the stove will shut down. This may also happen when starting the stove in extreme cold temperatures. Simply press the ON/OFF button again to restart the stove and keep the flames going in the burn pot.

If the stove will not start repeatedly, please check the TROUBLE SHOOTING section at the back of the manual and correct any problems.

Once the flame is well established, and 10 minutes have passed, the start-up cycle will end. At this time, if the stove is in the manual mode, the stove will return to the last heat level setting and the user may make heat level adjustments; or if the stove is in the THERMOSTAT HIGH/ LOW modes, the heat output of the stove will vary in accordance with the commands from the thermostat. Make sure the thermostat is set high enough on the THERMOSTAT ON/OFF mode, otherwise the stove will shut down.

Start-up a warm stove:

If the stove is warm at restart, the ON/OFF button must be pressed down and held for two seconds or more, until the ON/OFF light is lit.

Start up sequence is the same as cold start above.

SHUTDOWN INSTRUCTIONS

Turn off the stove by pressing the ON/OFF button. The stove will enter a shutdown cycle where the pellets fuel will stop feeding to allow the flames in the burn pot to burn itself out.

The exhaust blower and convection fan will continue to operate to evacuate the exhaust and to cool down the stove. Once the flames are out and the stove is sufficiently cooled down, the convection fan and exhaust blower will turn off automatically.

In the THERMOSTAT ON/OFF mode, turning the thermostat all the way down can also be used to turn off the stove.

DO NOT turn off the stove by disconnecting electrical power to the stove. This will cause the stove to miss the proper shutdown cycle, causing the release of smoke into the house and overheating of the stove.

FINE TUNING THE BURNING OF PELLET FUEL

Exhaust Air Shutter:

The exhaust air is controlled by the slider located inside the left door. To access the slider open the left door and loosen the 1/4 inch hex screw on the exhaust manifold. With the combustion air shutter (located on the right side) open all the way slide the exhaust restrictor in until a .20 to .25 vacuum cold or .17 to .21 vacuum hot is achieved. Measure the vacuum at the vacuum switch located on the floor just inside the right door. Disconnect the vacuum line and attach it to the vacuum gauge and move the inside wire to the center terminal on the vacuum switch. The front door must be closed and the venting attached to do this adjustment. After the adjustments are made reconnect the vacuum line and move the center wire back to the inside terminal.

Combustion Air Shutter:

The combustion air to the burn pot is controlled by the knob located on the right door the right door. The Exhaust air shutter should be properly adjusted before making adjustments to the combustion air. In most cases this air shutter should not need to be adjusted. To increase combustion air, push the slider in. To reduce combustion air, pull the slider out.
If the fuel pellets are consumed too fast, giving very brisk bright flames with flame height fluctuating significantly, the combustion air to the burn pot can be reduced by pulling the slider. Care should be used to not to reduce the burn pot combustion air too much as to cause a poor, lazy burn that will soot up the door glass.
The air shutter can also be used to slow down the burn rate of pellet fuel on low to prevent flames in the burn pot from going out. Remember that there is the LOW ADJUST button on the control panel to make adjustments to the fuel feed on lowest heat level. See LOW ADJUST button description.
In most cases, the stove operate best with the air shutter wide open, with the rod pushed all the way in.

Make sure the burn pot is properly seated:

If the burn pot is not properly seated into its holder, combustion air will flow around the burn pot instead of into the burn pot. This will cause poor combustion, which eventually overfills the burn pot with unburned pellets and extinguish the flames.
Improper seating of the burn pot will also cause fuel pellets to not fall into the burn pot and/or bounce outside of the burn pot.

SIDE VIEW OF

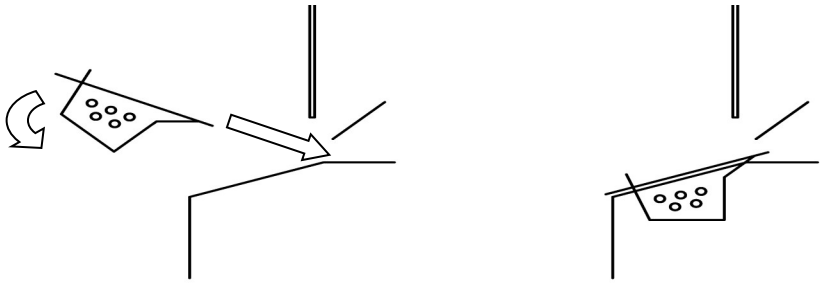

Keep the Burn Pot Clean:

When burning low quality pellet fuel or after long periods of burning, excess ash accumulates in the burn pot and obstructs the combustion air holes. This is evident by lazy orange flames that soot up the door glass frequently. Scrape out the ash build up in the burn pot and poke out any obstructions to the air hole. Keeping the burn pot clean will allow the pellet stove to operate at its maximum efficiency and lower the overall frequency of maintenance.

FINE TUNING THE BURNING OF PELLET FUEL (Cont…)

Fuel Quality:
Although there are standards for pellet fuel, fuel quality still varies greatly and will cause significant changes in burn rate and flame characteristics.
Smaller, shorter pellets will feed a lot quicker than larger, longer pellets. The burning of small short pellets may cause the stove to overfire. The stove may not be able to burn fast feeding small short pellets efficiently at the maximum heat setting, causing tall smoky flames and the glass to soot up very quickly. The operator will have to turn the heat level down to a burn this kind of pellet. On the other hand, large long pellets may feed too slow so as to cause the flame to go out on the minimum heat setting. In this case, the operator can use the LOW ADJUST button to increase the feed rate on minimum.
Various brands and types of pellets will burn differently. It is best to use high quality premium pellets for ease of use and less maintenance. If only low grade pellets are available, understand their limitations and familiarize yourself with the stove settings that will burn these pellets most effectively.

WARNING: Do not overfire the stove. Use the heat settings controls to keep flame height just below the top of the firebox interior. The flames should be bright and clean.
Do not operate the stove if the flames are dark and sooty, or if the burn pot overfills with pellets. Turn the stove off and troubleshoot and problems.

Note: Alternating the burning of the stove on high and low will slow down the accumulation of flyash in the burn pot; therefore reducing the frequency of pot cleaning.

MANUAL START-UP

In case of igniter failure, the pellet stove can be started manually. Use a suitable pellet stove starter. The dry wax impregnated wood shavings type starters work the best and safer for storage. Clean the burn pot. Fill it half full with equal parts of fire starter with pellets. Mix well the starter with the pellets. Close the door and press the ON/OFF button on the control panel. Wait 20 seconds for the controller to initiate and check all sensors. Open the door and light the mixture in the burn pot with a match or lighter. Wait about 10 to 20 seconds for the flames to establish a bit. Close and securely latch the door. The flames in the burn pot should grow and establish. The stove should operate as normal. However, only operate the stove in the manual or thermostat HIGH/LOW modes; the stove is not capable of restarting in the thermostat ON/ OFF mode due to the failed igniter.

THERMOSTAT

Use contact thermostats, remote control or remote switch only. The pellet stove generates a low voltage (5VDC) to use on the thermostat circuit. **Do not use any thermostat that supply power to the circuit.**
CAUTION: DISCONNECT POWER TO THE PELLET STOVE BEFORE MAKING ANY THERMOSTAT CONNECTIONS. CONTROL BOARD MAYBE DAMAGED BY SHORTING OF THE THERMOSTAT WIRES TO THE STOVE CHASSIS.
The connectors for the thermostat wire is located at the back of the stove on the right hand side. Use a Philips screw driver to remove the two screws holding the cover plate. Run the thermostat wires through the grommet on the cover plate. Loosen the screws to the terminal block and connect the stripped ends of the thermostat wires to the terminals. Replace the cover plate.

MAINTENANCE

- **REGULAR MAINTENANCE MUST BE CONDUCTED FOR SAFE AND EFFICIENT OPERATION OF THE STOVE.**
- **CONDUCT MAINTENANCE ON A COLD STOVE ONLY. TURN OFF THE STOVE AND ALLOW SUFFICIENT TIME FOR IT TO COOL.**
- **DISCONNECT POWER TO THE STOVE IF MAINTENANCE REQUIRES THE OPENING OF SERVICE PANEL(S).**

CLEANING DOOR GLASS:

Keep all objects away from the door and glass during stove operation. Only clean the door glass with the stove shut down and the glass cool to the touch.
Use a soft lint free cloth to wipe the exterior of the glass and trims.
Use a damp paper towel or newspaper to clean the interior of the glass. To remove more stubborn residues and stains, dip a damp paper towel in some fine ash from the firebox and gentle rub them off. Your stove dealer also carry glass cleaners for tough cleaning jobs.
If the door glass dirty up quickly with heavy dark sooty film, this is an indication that the stove is not operating properly. Adjustment of combustion air and/or clean the burn pot. A light white or tan residue on the glass that can be easily wiped off is normal and an indication that the stove is operating optimally.

ASH DISPOSAL:

Soot and Flyash: Formation and Need for Removal—The products of combustion will contain small particles of flyash. The flyash will collect in the exhaust venting system and restrict the flow of the flue gases. Incomplete combustion, such as occurs during startup, shutdown, or incorrect operation of the room heater will lead to some soot formation which will collect in the exhaust venting system. The exhaust venting system should be inspected at least once every year to determine if cleaning is necessary.

Every 60 to 120 hours of operation:

Open the door to get access to inside of the firebox. Take out the burn pot and scraped out the ashes or clinkers inside the burn pot and poke out any obstructions in the air holes.
Grasp the ash clean-out slider and pull it out about two inches. Use a small hand brush and sweep the firebox ashes and ashes under the burn pot into the opening uncovered by the slider. The ashes will fall into the ash drawer below. Poor quality pellets with high ash content will require frequent ash cleaning and disposal.
Empty the ash drawer when it reached about 3/4 full to minimize chance of ash spillage. This may need to be done every third of fourth ash sweeping of the firebox (180 to 480 hours of operation). Grasp the front lip of the ash drawer and pull it out carefully. Properly dispose of the ashes.
CAUTION: Ashes can start fires. Never dispose of ashes in a combustible container. Remove ashes only when stove and ashes are cold.
If the ashes are to be disposed of by burial in soil or otherwise locally dispersed, they should be retained in the closed container until they are thoroughly cooled. Do not place other waste materials in the ash container.
CAUTION: For safe and proper operation of the stove, the ash clean-out slider must be pushed all the way in, ash drawer in place and the door securely latched.

Cleaning cont.

MAKE SURE STOVE IS OFF AND COOLED BEFORE ATTEMPTING THE FOLLOWING PROCEDURES

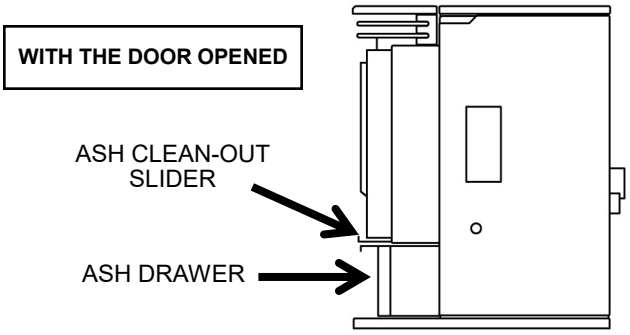

Every ton of pellet fuel burned or 6 months:

Disconnect power to the stove before conducting the following maintenance.

- Open the left side service panel. This can be done by removing two screws. Remove a screw near the top front corner of the side panel; and a screw at the front of the panel near the bottom. The side panel can then be detached by swinging it out and lifting it up and away from the back, with the hopper lid down.
- You will also need a 1/4” and a 3/8” hex nut driver. Remove the two screws holding the firebox trim panel to the side of the firebox.
- Remove the two bolts of the **clean-out cover** on the side of the firebox.
- Loosen the six 1/4” hex screws holding the exhaust blower motor mounting plate. Rotate the mounting plate anti-clockwise and carefully remove the motor assembly. Place it down on the floor.
- Use a shop vacuum equipped with a fine dust filter, a specialty steel canister vacuum designed for removing ashes is preferred. Place the vacuum duct into the firebox clean-out opening and vacuum out all the ash accumulations. Vacuum out the ash accumulations in the exhaust blower housing and exhaust ducts.
- If the vent pipe is equipped with an ash clean-out tee, this is a good time to disconnect it and clean it also.
- Use a vacuum brush and gently brush off all ash accumulations stuck to the exhaust blower fan blades. Be careful not to bend the blades.
- Properly replace all parts in the reverse order of disassembly.
- Also vacuum out any lint of debris accumulations in and around the stove.

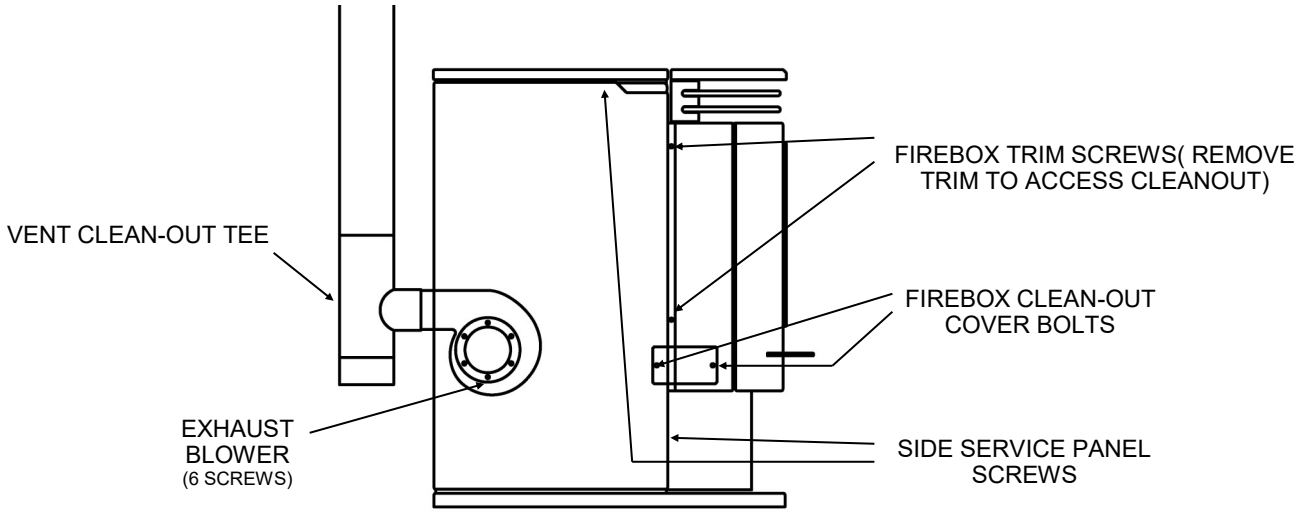

Cleaning your PS-1 Pellet Stove

Basic Cleaning

Never attempt to clean a hot fireplace. Injury may result.

Remove door pin

Lift the door off of the bottom pin

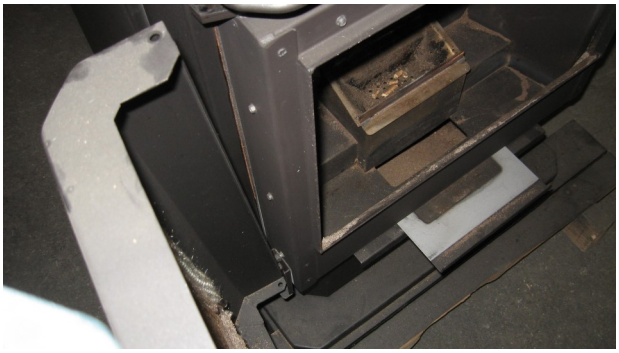

To access the ignitor. Open the hopper lid . Remove the pull knob and two (2) screws holding the right side door closed.

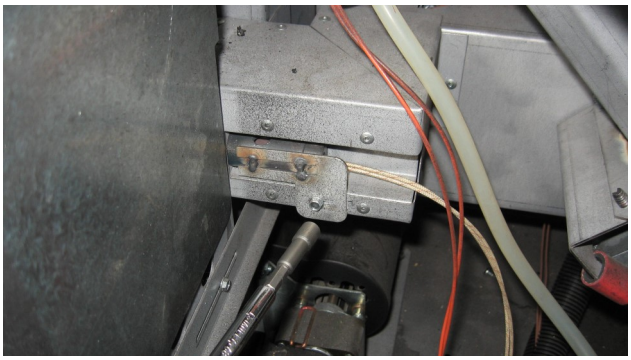

Loosen the hex head screw holding the hot surface igniter and slide the housing back slightly

Cleaning your PS-1 Pellet Stove

Basic Cleaning

With the igniter loosened, lift out the burn pot

Clean area below burn pot

Replace fibreglass gasket before burn pot reinstallation if required

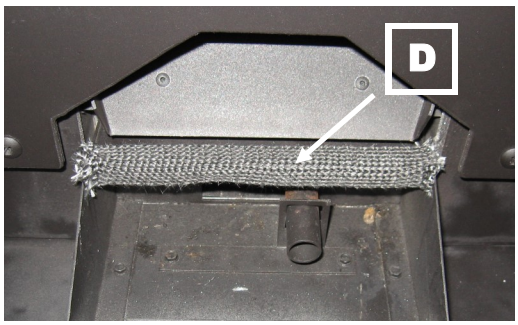

Open ash chute approximately 2”

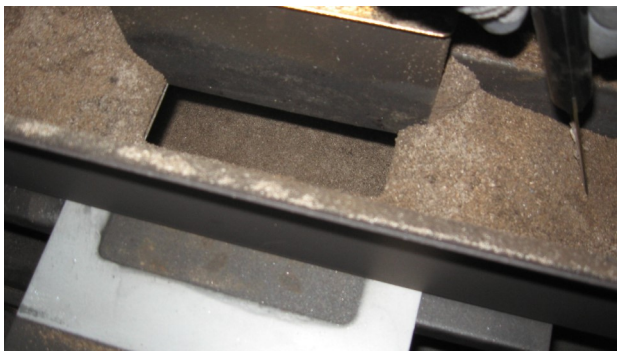

Deposit all residual ash into hopper and empty into a non flammable depository

Cleaning your PS-1 Pellet Stove

Basic Cleaning

Remove left side panel to access cleanout

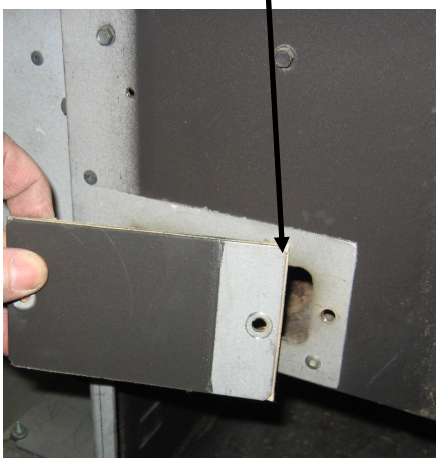

A long extension is needed to clean the entire length of the firebox

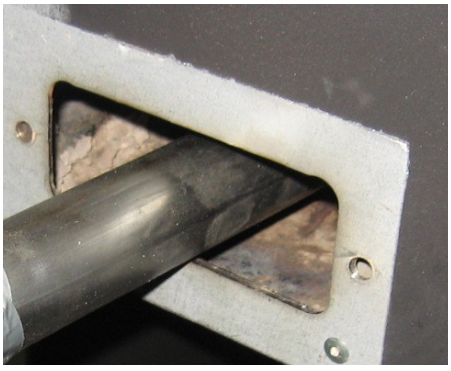

Replace access door after cleaning out the compartment. Make sure gasket is in good condition to maintain seal

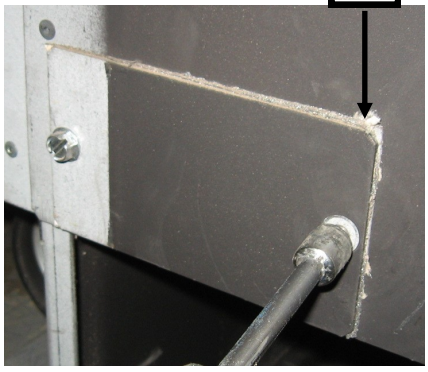

Cleaning your PS-1 Pellet Stove

Advanced Cleaning

Remove the three (3) screws above the door opening

Remove the retaining baffle and place to the side for re-installation

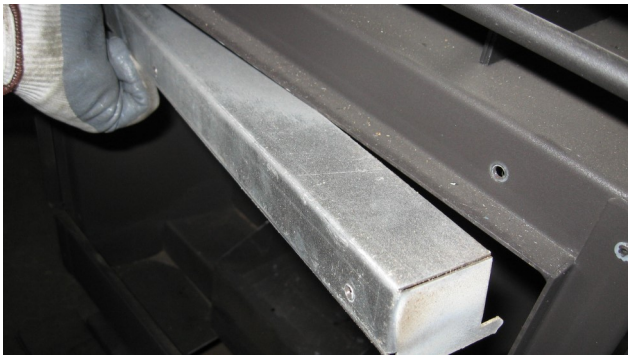

Remove three (3) screws down each side of the firebox

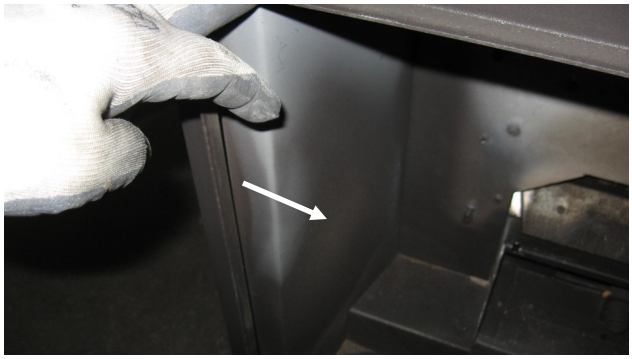

Remove side panels from the firebox. Panels are pegged onto posts in the back of the firebox to hold them in place

Swing the front of the side panels towards the center of the stove then pull forward to clear the back pins

Cleaning your PS-1 Pellet Stove

Advanced Cleaning

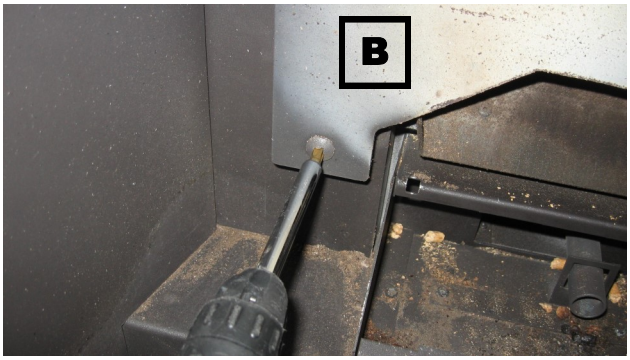

Remove the plate heat shield by removing the four (4) philips head screws.
A drop of lubricant (ie. Liquid wrench or WD-40) might help release seized bolts if needed.

Clean ash in behind panels

NOTE: GASKET REPLACEMENT MAY /WILL BE REQUIRED PAST THIS POINT

Remove the chute cover by removing the eight (8) hex head screws

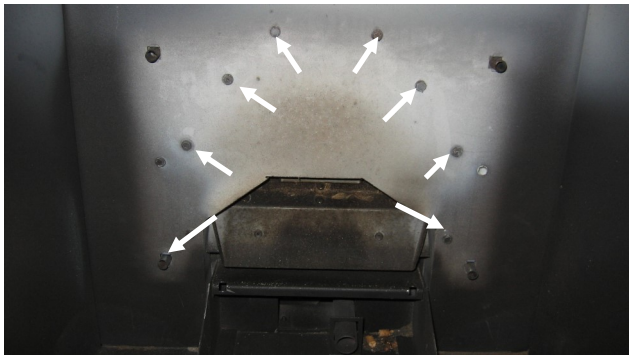

Cleaning your PS-1 Pellet Stove

Advanced Cleaning

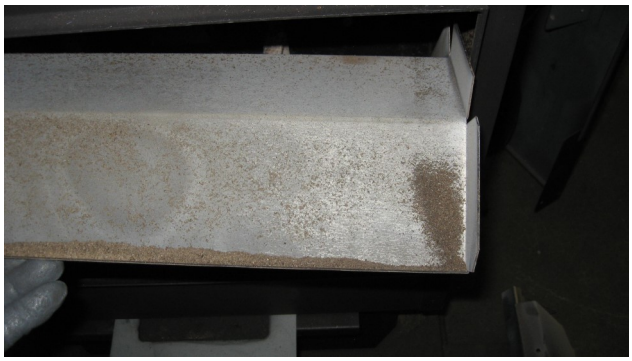

Chute shield will drop forward to the front of the fireplace. Remove and place to the side

Clean behind chute shield and down inside air passage. This is also cleaned from the side access panel so may not be required in most cases. Only proceed with this in the event of an extreme blockage

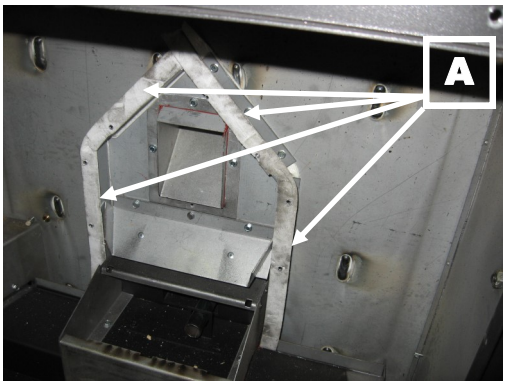

Replace mounting bracket gasket before reinstalling chute cover

Reinstall Chute Shield and Heat Shield after you have applied gasket.

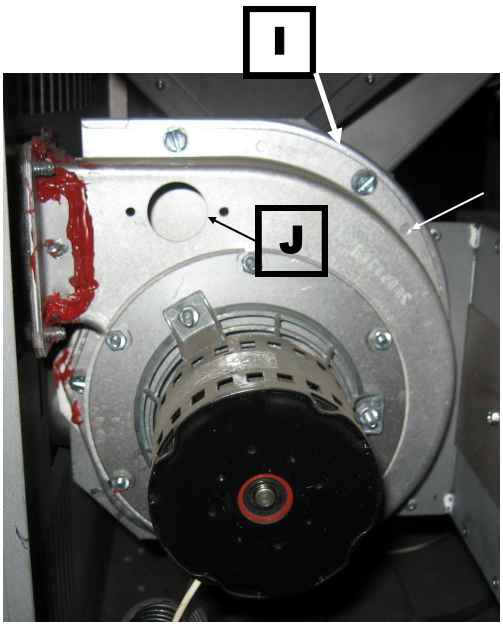

In extreme blockage the exhaust inducer may need to be removed and cleaned. This will require (2) gaskets to be replaced.
One for the fan to the body.
One to the vent connection

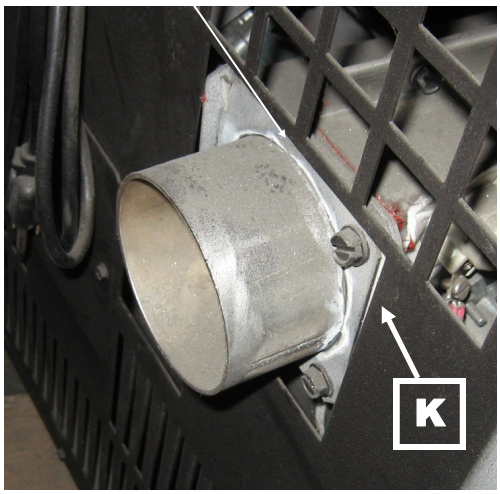

Cleaning your PS-1 Pellet Stove

Advanced Cleaning

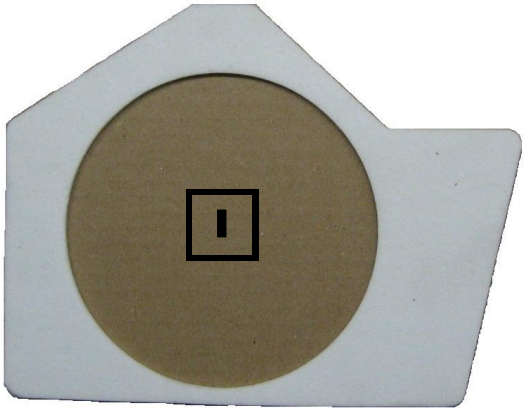

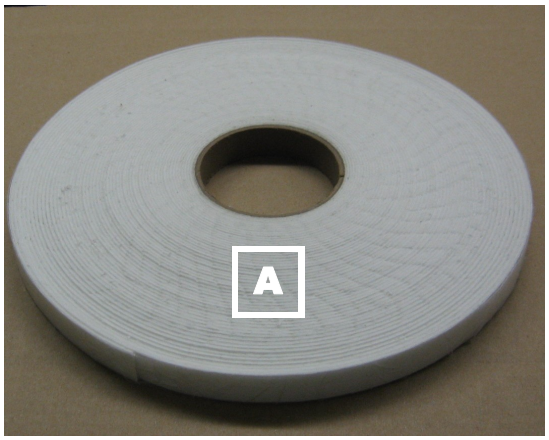

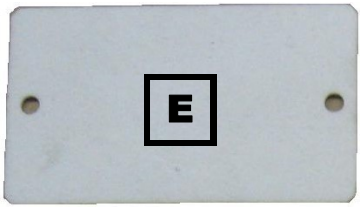

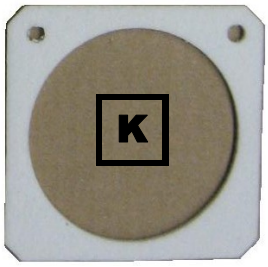

Parts & Gaskets

A	--	Gasket Tape	..... 314 -0163
B	--	Heavy Gauge Heat Shield	..... 782-0004 (R3)
C	--	Chute Cover	..... 782-0046 (R6)
D	--	Burn Pot Gasket	..... 314-0006 (8” required)
E	--	Clean out Access Gasket	 314-0159
F	--	Burn Pot	..... PS1-POT
G	--	3/4” Door Rope Gasket	..... 314-0015 (60” required)
H	--	Gasket Glue	 320-0016
I	--	Inducer Fan Gasket	 314-0154
J	--	Proof of Fire Snap-disc gasket	 314-0115
K	--	Vent Adapter Gasket	 314-0101

MISCELLANEOUS MAINTENANCE:

DOOR GLASS BREAKAGE

See your dealer for the exact replacement of door assembly. The owner should not attempt to replace the special high temperature ceramic glass. A precision air wash system is also built into the door assembly. If the door gasket is damaged, it can be replaced by your dealer with exact factory replacement parts.

PAINT

You may touch up the Archgard Optima PS1 with STOVE BRIGHT 316-0100 Black high temperature paint. The correct paint is available from your dealer. When you paint the stove, remove the gold items (i.e., door), mask the control panel, control knobs, handles and cover the area surrounding the stove from over spray. Follow the directions outlined on the spray can. DO NOT attempt to paint while the stove is still warm. Keep the spray can away from any source of heat or open flame. Ensure that there is adequate ventilation in the room from the time you start painting until the paint is dry.

GOLD PLATED TRIMS

If you have gold doors trims, grills or other optional accessories, you will be happy to know that they will not tarnish, however they are not scratch resistant. They require a totally abrasive free cleaner. Use only mild soap and warm water or denatured alcohol to clean the gold when the surface is cool. The use of any household cleaner, such as Windex, abrasive cleaners, or any form of acid, may permanently etch or remove some of the gold plating. Before every fire, be absolutely sure to wipe off all fingerprints from the gold plating. Acid from debris or even your fingerprints may permanently etch the gold plating and void the warranty.

DANGER: RISK OF ELECTRICAL SHOCK. DISCONNECT POWER BEFORE SERVICING STOVE.
CAUTION: MOVING PARTS MAY CAUSE INJURY. HOT PARTS, DO NOT OPERATE STOVE WITH SIDE OR BACK SERVICE PANELS REMOVED OR OPENED.

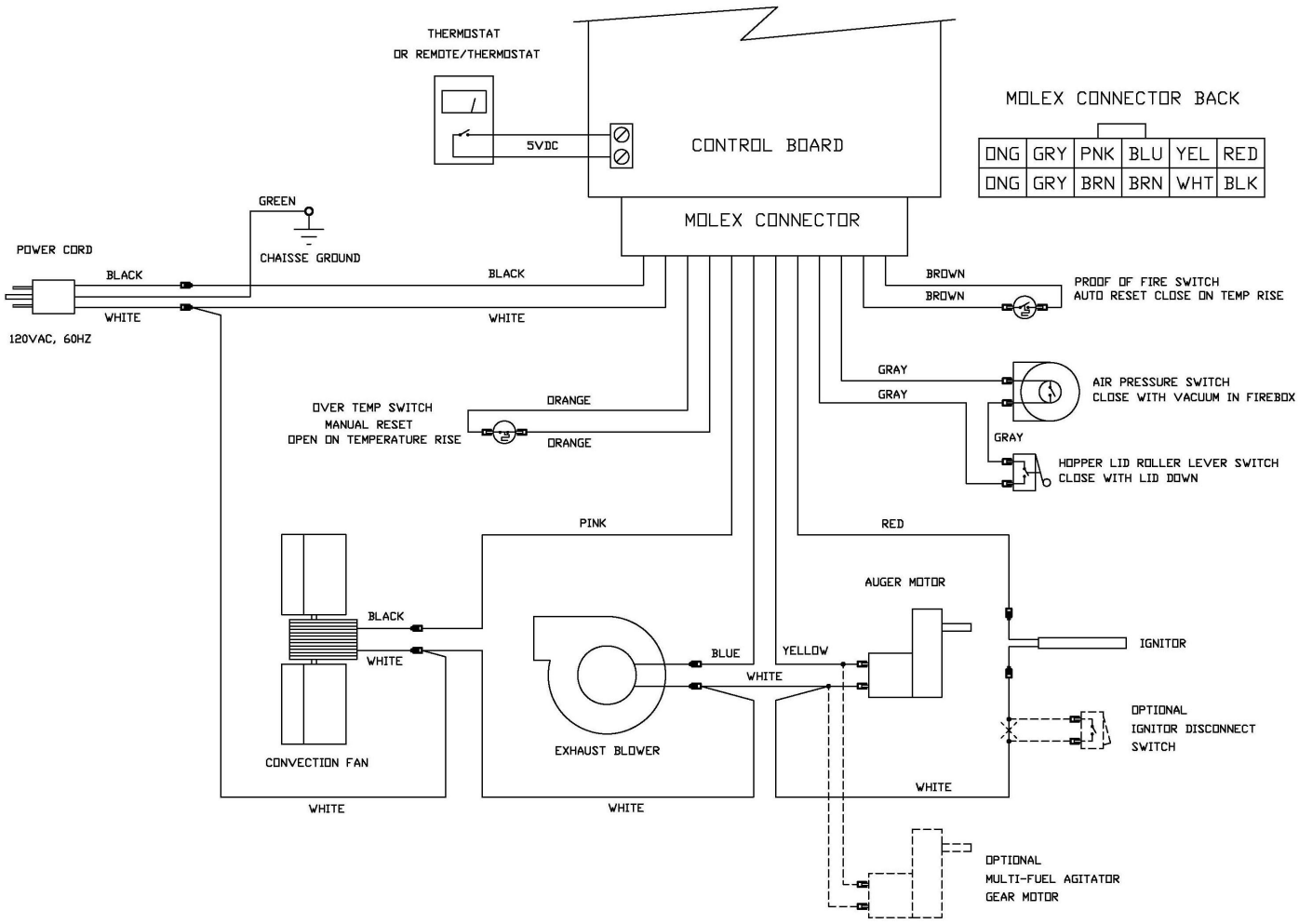

ARCHGARD OPTIMA PS1 PELLET STOVE ELECTICAL CIRCUIT DIAGRAM

COMPONENT LOCATIONS

RIGHT SIDE WITH
SERVICE PANEL REMOVED

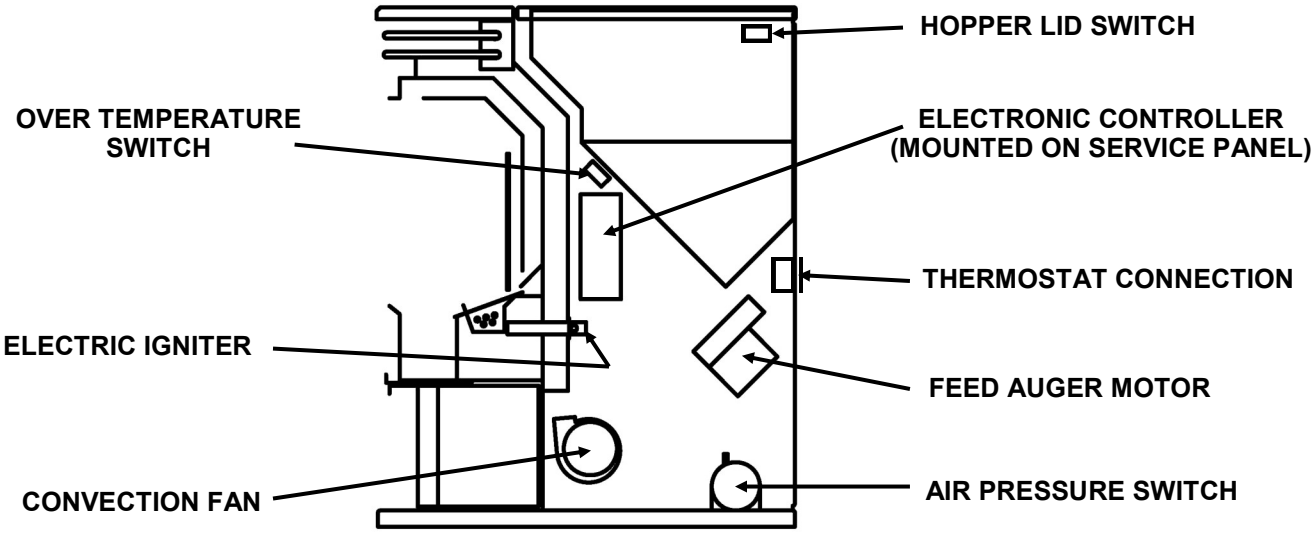

LEFT SIDE WITH
SERVICE PANEL REMOVED

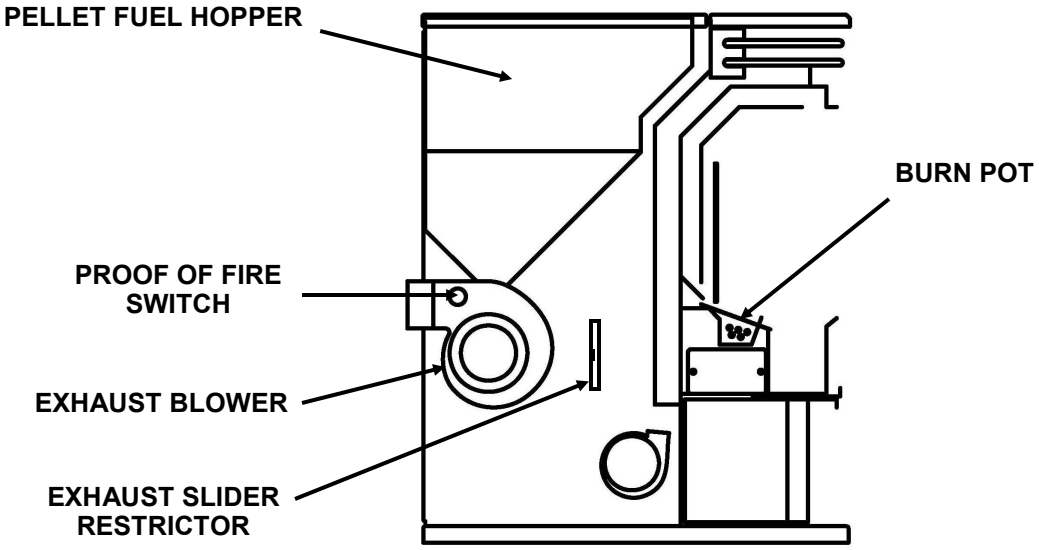

TROUBLESHOOTING

PROBLEM	CAUSE	CURE
Stove Will Not Start. Make sure the hopper lid is closed flat so as to contact the auger interlock switch. Make sure the door is closed and securely latched. If it is the initial start up or the hopper has run completely empty. Two or three start-ups and the use of the FUEL FEED button is required. The stove control panel will return a flashing #2 light if it encounters a hopper lid ajar or a tripped air pressure switch related problem.	1. No electrical power.	Make sure the stove is plug in to a 120VAC electrical outlet. Check outlet for electrical power and the correct voltage. The ON/OFF light should light when the ON/OFF button is pressed and held for 2 seconds.
	2. No pellet feed.	Make sure the hopper is filled with pellet fuel as per specifications in the manual. Keep the hopper lid closed to activate fuel feed auger. Securely latched the door. An open door will trip the air pressure switch and disengage the fuel feed auger. If it is the first time starting the stove or the hopper has run completely empty, the pellet fuel feed system takes a long period of time to load and start feeding fuel into the burn pot. Two or three repeated start up maybe required. Check to see if FUEL FEED light on the control light is flashing intermittently to indicate activation of the fuel feed auger. Listen for a faint intermittent hum of an operating feed auger motor.
	3. Excessive negative pressure in the room.	Balance pressure in the room by opening a window. Check for flashing #2 light.
	4. Block vent system.	Check vent system for blockage. Check the clean-out Tee for ash build-up. Check vent cap. Check for flashing #2 light.
	5. Clogged combustion air inlet or inlet pipe.	Check for blockage in the air intake connector and duct.. Check for flashing #2 light.
	6. Clogged exhaust blower or exhaust passages.	Conduct ash removal maintenance in the stove. Check for flashing #2 light.
	7. Defective exhaust blower.	Check for operation of the exhaust blower. Listen for hum next to the exhaust connector. Check for flashing #2 light.
	8. Defective air pressure switch.	Check for blockage of tubing connected to the Air pressure switch. Check of operation of the switch. Check for flashing #2 light.

PROBLEM	CAUSE	CURE
Stove Will Not Start. (Cont…)	9. Tripped or defective over temperature switch.	Press the red manual reset button on the switch. Check for proper operation of the switch and its connections. Also check to see if the convection blower is working properly.
	10. Defective control board.	Check connections. Check to see if the on-board fuse is blown. It is a mini 5A fast blow fuse. Before replacing the fuse, check for the cause of the blown fuse. It could be a short-out wire or defective electrical components.
Stove won't respond to changes to the heat level.	1. Stove is still in start-up cycle.	Wait for at least 10 minutes. The stove well also have to heat up sufficiently to turn on the Proof of fire switch. Even if you are starting a warm stove, you still have to wait at least 10 minutes for the start-up cycle to end. A good indicator of the stove has passed the start-up cycle is by the feel of high convection air flow on high heat setting.
	2. The stove controller is set to Thermostat and it is not requesting heat.	Switch controller to Manual or adjust the thermostat to request heat
	3. The Proof of fire switch is defective.	Check for proper operation of the Proof of fire switch. If the flames are going strong and yet the stove shuts down after 15 minutes of operation with the #3 light flashing is a good indication of a defective switch.
Pellet feeds into the burn pot but will not start. Burn pot fills with pellets and then shuts down.	1. Burn pot is clogged.	Clean out burn pot of ash and clinkers. Poke out any block air holes.
	2. Burn pot is not installed or seated properly	Hot air from the igniter can not reach the pellet in the burn pot to start ignition. Install and seat burn pot properly.
	3. Auto start electric igniter is burned out.	Remove the burn pot and check to see if the electric igniter is glowing red inside the igniter tube. **If the igniter is defective, the stove can still be started manually. Put some pellet mixed with pellet stove starter in the burn pot and light it with match or lighter. Let the flames established. Press the ON/OFF button on the control panel to start the stove.**
	4. Air inlet to the igniter tube is blocked.	If igniter is glowing and the burn pot is seated properly, disconnect electrical power to the stove and open the service panel to check for any obstruction to the air inlet holes on the igniter tube.

PROBLEM	CAUSE	CURE
Glass is Dirty (A light white/tan accumulation is normal)	1. Need more combustion air.	Push combustion air control knob in.
	2. Burn pot is clogged	Clean out burn pot and poke out clogged air holes.
	3. Poor fuel	Change to dry clean fuel. Use higher quality premium pellet fuel.
	4. Clogged venting system.	Check for blockage in the venting system. Check vent cap and ash clean-out Tee.
	5. Clogged combustion air inlet or inlet pipe.	Check for blockage in the air intake connector and duct..
	6. Excessive negative pressure in the room.	Balance pressure in the room by opening a window.
	7. Clogged exhaust blower or exhaust passages.	Conduct ash removal maintenance.
	8. Defective exhaust blower.	Check for proper voltage to the stove. If the blower runs very slow, replace blower.
Flame Goes Out on Low or Won't Burn Overnight On Low. The Heat Level #3 light will flash on the control panel to indicate that the Proof of Fire sensor has tripped.	1. Burn pot is clogged.	Clean out burn pot and poke out clogged air holes.
	2. Not high enough pellet fuel feed rate.	Use the LOW ADJUST button to increase fuel feed on heat setting 1. Select heat setting #1. Press the LOW ADJUST button until both heat setting 1 and 4 light is lit.
	3. Poor fuel	Change to dry clean fuel. Use higher quality premium pellet fuel. Increase fuel feed rate on low by using the LOW ADJUST button as above.
	4. Combustion air set too high	Gradually restrict combustion air by pulling the control knob out.

PARTS LIST FOR OPTIMA PS1

NUMBER	PART NO.	DESCRIPTION
	PS1-FS	FREESTANDING OPTIMA PS1 PELLET STOVE STANDARD **(ALL OTHER OPTIONAL COMPONENTS MUST BE ADDED SEPARATELY)**
OPTIONAL ITEMS		
1	**PS1-BRPL**	DECORATIVE BRICK LINER
REPLACEMENT ITEMS		
1	**314-0015**	DOOR GASKET 3/4" DIA. GRAPHITE ROPE GASKET
2	**300-0145**	DOOR HANDLE
3	**300-0146**	COMBUSTION AIR ADJUST KNOB
4	**305-0052**	ELECTRIC IGNITER
5	**PS1-POT**	BURN POT (STANDARD)
6	**305-0027**	PROOF OF FIRE SWITCH
7	**305-0049**	OVER TEMPERATURE SWITCH
8	**305-0047**	AIR PRESSURE SWITCH / VACUUM SWITCH
9	**305-0045**	HOPPER LID SWITCH
10	**305-0053**	EXHAUST BLOWER
11	**305-0043**	CONVECTION BLOWER
12	**305-0046**	FUEL FEED AUGER MOTOR
13	**305-0050**	ELECTRONIC CONTROL BOARD

NOTES

NOTES

ARCHGARD LIMITED WARRANTY

This Limited Warranty is made by ARCHGARD INDUSTRIES LTD., hereinafter referred to as "Archgard". Archgard warrants to the original purchaser of an Archgard Wood burning fireplace (s) that the product will be free of defects in materials and workmanship under normal use and service, for a "lifetime".

INCLUSIONS: "LIFETIME LIMITED WARRANTY"

- Firebox and firebox liners against splitting or cracking.
- Ceramic Glass against thermal breakage.
- All plated trims and accessories against defective manufacturing
- NOTE: Discoloration and some minor movement of certain parts are normal and are not a defect and therefore, not covered under warranty.

The above will be covered "parts & subsidized labor" to the original purchaser for FIVE years and "parts" only thereafter from original date of purchase.

❖ Special Finishes—One year on brushed nickel louvers and doors. You can expect some changes in color as the product "ages" with constant heating and cooling. Archgard warranties the product for any manufacturing defects on the original product. However, the manufacturers warranty does not cover changing colors and marks, ie: finder prints etc applied after the purchase of the product. Damage from the ise of abrasive cleaners is not covered by warranty

INCLUSIONS: "ONE YEAR LIMITED WARRANTY"

- All electrical components, such as electronic controller, control panel, blowers, fans, auger motors, wiring and snap discs.
- Burn pot, auger feed components and multi-fuel burn pot ash disposal components.

The above will be covered "parts & subsidized labor" to the original purchaser for ONE year from date of purchase.

EXCLUSIONS: "1 YEAR AND 5 YEAR LIMITED WARRANTY"

- Archgard does not offer warranty on damages to fireplace mantel (s), trims or tiles.
- Travel time or mileage to original purchasers residence. Archgard suggests that you pre-arrange travel expenses with your Authorized Archgard Dealer.
- Door Latch Hardware, paint, gaskets or trim.
- This warranty does not cover installation and operational related problems such as over-firing, use of unsuitable fuel, lack of maintenance, user abuse, downdrafts or spillage caused by environmental conditions, nearby trees, buildings, hill tops, mountains, inadequate venting or ventilation, excessive offsets, negative air pressures caused by mechanical systems such as furnaces, fans, clothes dryers, etc.

WHAT TO DO IN THE EVENT OF A PROBLEM:

- Thoroughly read your manual.
- If you cannot solve the problem, contact your Archgard Dealer or representative.
- When calling for help please have the following information:
  Model of your Stove Serial Number Place of Purchase
  Date of Purchase Problem Description
- NOTE: Warranty may be void if work is carried out by an unqualified person (s). Only original Archgard parts may be used. Please consult your Archgard dealer or representative if in doubt about a replacement part (s).

OBTAINING WARRANTY SERVICE:

To obtain warranty service, the original purchaser shall return the defective part (s) to the original authorized Archgard selling dealer transportation prepaid, along with the serial number of the appliance and proof of purchase. Any defective part, in our judgment, will be repaired or replaced at Archgard's discretion. The dealer must obtain approval from Archgard before any repairs are made.

**** Subsidy according to job scale as predetermined by Archgard Industries Ltd.***

ARCHGARD
LIFETIME LIMITED WARRANTY

LIMITED WARRANTY CONT'D

WARRANTY LIMITATION:
THIS LIMITED WARRANTY IS MADE IN LIEU OF ALL OTHER WARRANTIES, EXPRESSED OR IMPLIED AS TO QUALITY, MERCHANTABILITY OR FITNESS FOR PARTICULAR PURPOSE.

Archgard is not liable for freight or labor on any appliance replaced in the field. Any part or parts of this unit which in our judgment show evidence of such defects will be repaired or replaced at Archgard's option, through an accredited dealer or Agent provided that the defective part be returned to the dealer or agent **Transportation Prepaid**, if requested. The appliance is only warranted for the use as intended by the installation and operating instruction and local building codes. The warranty will not cover damage due to accident, misuse, abuse, alteration, improper installation or "Acts Of God", "Act of Terrorism" or Shipping.

Installation and environmental problems are not the responsibility of the manufacturer and therefore are not covered under the terms of this warranty.

Performance problems due to operator error will not be covered by this warranty policy.

Products made or provided by other manufacturers and used on conjunction with the operation of the appliance without prior authorization form Archgard Industries may nullify your warranty on this product

This limited warranty is void unless the appliance is installed by a qualified installer, in accordance with the instructions furnished with the appliance. Some Provinces or States do not allow limitations on how long an implied warranty lasts, so the above limitation may not apply to the original purchaser. Any damage resulting from defects in this product, is limited to the replacement of the defective part (s) and does not include incidental and consequential exposures sustained in connection with the product. This includes facing (s), mantle (s), cabinet (s), tile (s) or any other finishes resulting from removal of the appliance. This warranty is limited to residential use only and gives the consumer specific rights. These rights may vary from State to State or Province to Province.

CUT ALONG LINE

POSTAGE

WARRANTY REGISTRATION

ARCHGARD INDUSTRIES LTD.
7116 BEATTY DRIVE
MISSION, B.C. CANADA
V2V 6B4

FOLD DOWN AT LINE

CUT ALONG LINE

FOLD DOWN AT LINE & TAPE CLOSED

CUT ALONG LINE

Model # : OPTIMA PS1 Serial #: _____ Date Installed: ____/____/____
mm dd yyyy

Name: _____ Address: _____

City: _____ State/Prov: _____ ZIP: _____ Phone: (_____) _____

Dealer's Name & Address: _____

City: _____ State/Prov: _____ ZIP: _____ Phone: (_____) _____

Installer's Name & Address: _____

City: _____ State/Prov: _____ ZIP: _____ Phone: (_____) _____

Why did you choose this product? _____

_____

Thank you for purchasing our product and filling out this warranty card.

ARCHGARD INDUSTRIES LTD.
7116 BEATTY DRIVE
MISSION, B.C. V2V 6B4
CANADA

WEBSITE: WWW.ARCHGARD.COM